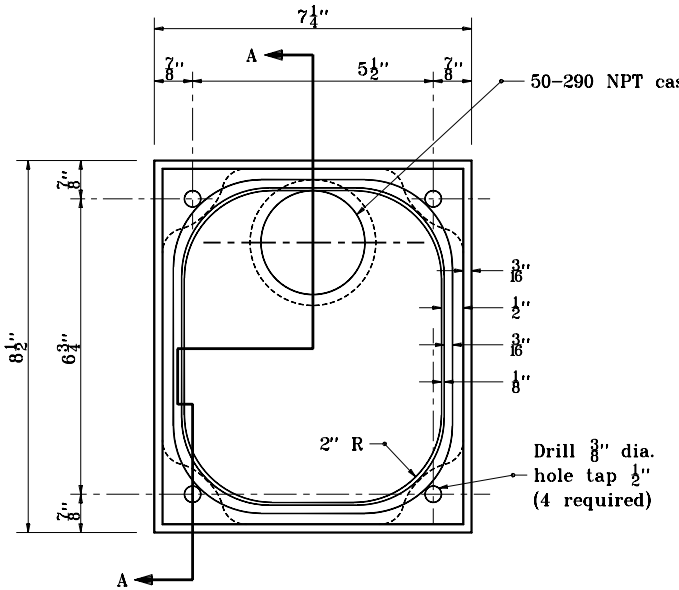


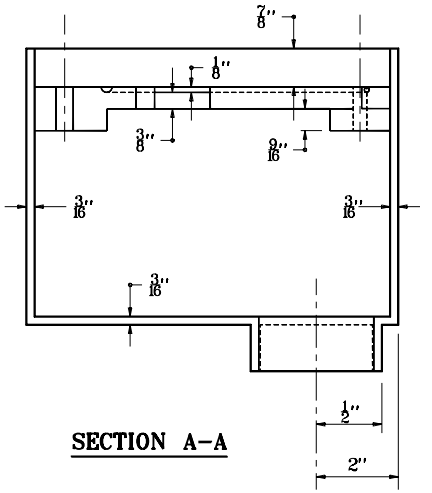


SECTION A-A

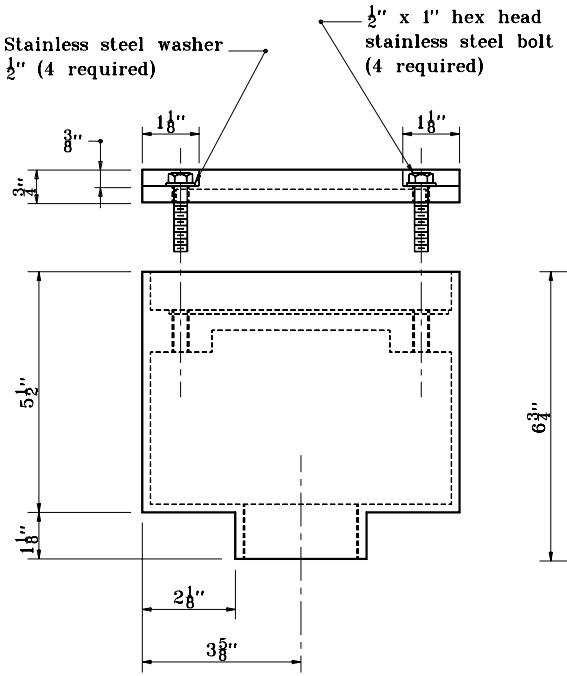


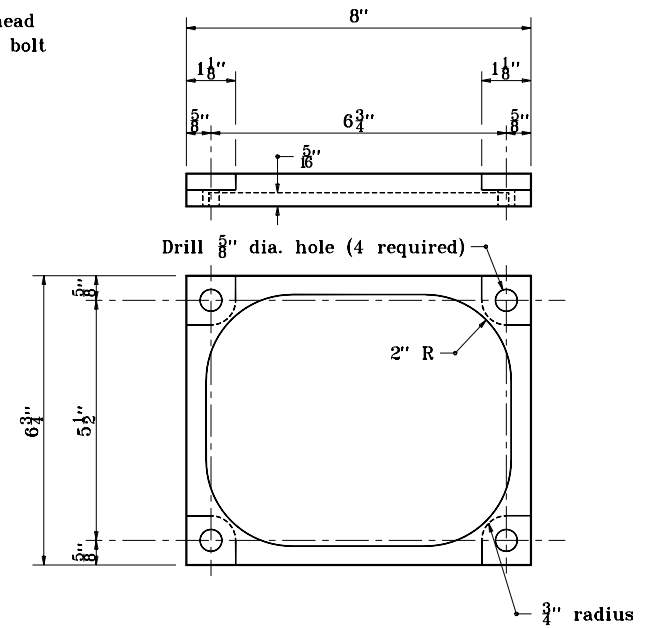


INDIANA DEPARTMENT OF TRANSPORTATION

# DETAIL OF DETECTOR HOUSING

MAY 1998

STANDARD DRAWING NO. E 805-SGDH-02

| | | |
|---|---|---|
| | DETAILS PLACED IN THIS FORMAT | 11-15-99 |
| | /s/ Anthony L. Uremovich<br>DESIGN STANDARDS ENGINEER | 11-15-99<br>DATE |
| | /s/ Firooz Zandi<br>CHIEF HIGHWAY ENGINEER | 11-15-99<br>DATE |
| DESIGN STANDARDS ENGINEER | ORIGINALLY APPROVED | 5-01-98 |

ANTHONY L. UREMOVICH REGISTERED No. 18095 STATE OF INDIANA PROFESSIONAL ENGINEER