GENERAL NOTES

1. Approximate weight for cast iron ring and cover shall be 320 lb.

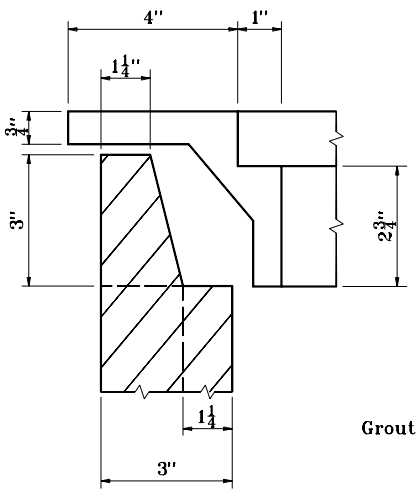

DETAIL A

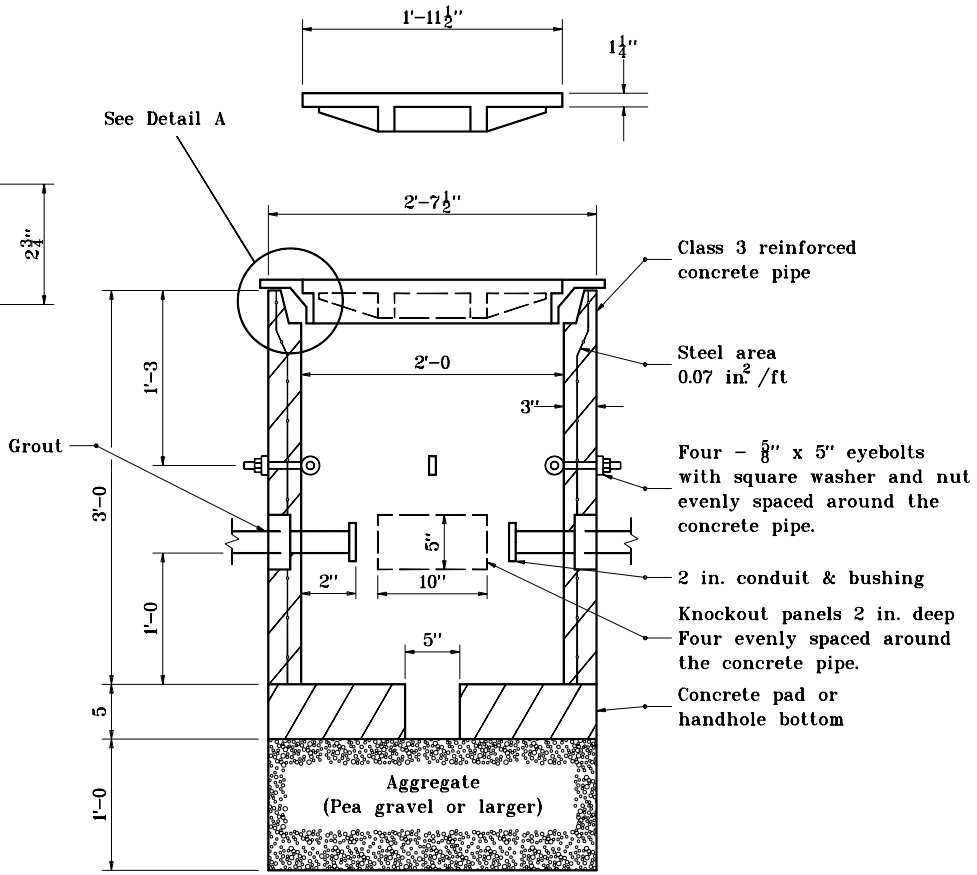

HANDHOLE

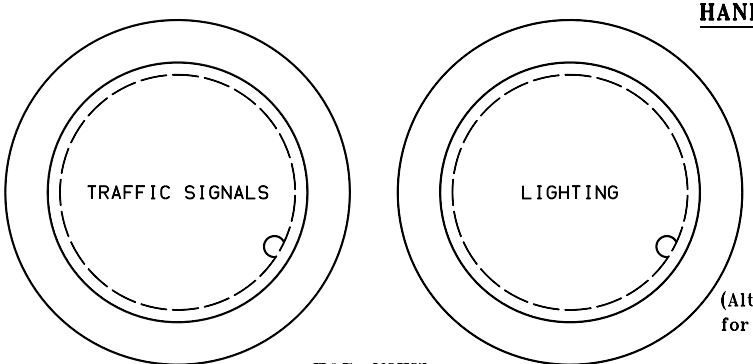

TOP VIEW

INDIANA DEPARTMENT OF TRANSPORTATION

SIGNAL HANDHOLE

JUNE 1996

STANDARD DRAWING NO. E 805-SGCF-04

ANTHONY L. UREMOVICH REGISTERED No. 18095 STATE OF INDIANA PROFESSIONAL ENGINEER

DESIGN STANDARDS ENGINEER

DETAILS PLACED IN THIS FORMAT	11-15-99
/s/ Anthony L. Uremovich DESIGN STANDARDS ENGINEER	11-15-99 DATE
/s/ Firooz Zandi CHIEF HIGHWAY ENGINEER	11-15-99 DATE
ORIGINALLY APPROVED	6-03-96