GENERAL NOTES

1. Sand-cast aluminum alloy.

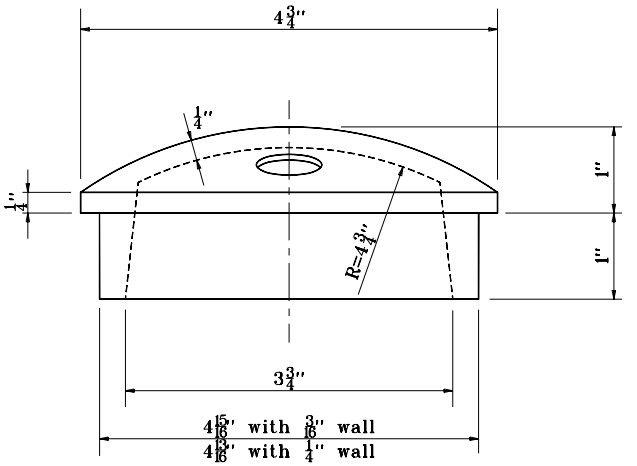

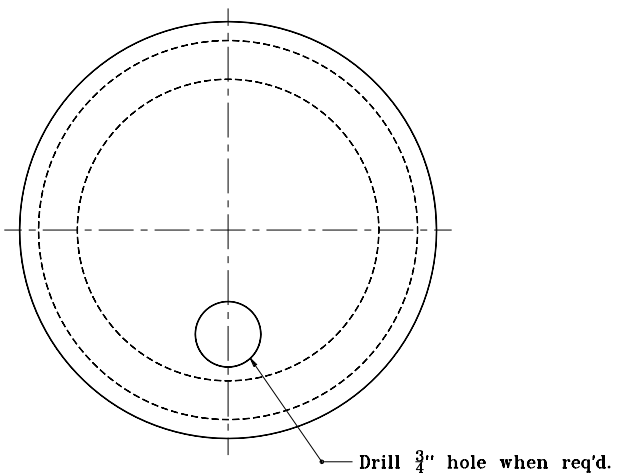

END CAP FOR 4 3/4 IN. O.D. TUBE

INDIANA DEPARTMENT OF TRANSPORTATION

END CAP

SEPTEMBER 2001

STANDARD DRAWING NO. **E 802-SNOH-12**

ANTHONY L. UREMOVICH REGISTERED No. 18095 STATE OF INDIANA PROFESSIONAL ENGINEER

DESIGN STANDARDS ENGINEER

/s/ Anthony L. Uremovich 9-04-01
DESIGN STANDARDS ENGINEER DATE

/s/ Firooz Zandi 9-04-01
CHIEF HIGHWAY ENGINEER DATE