GENERAL NOTES

1. Flanges shall be given additional finish if necessary to ensure contact between plates.

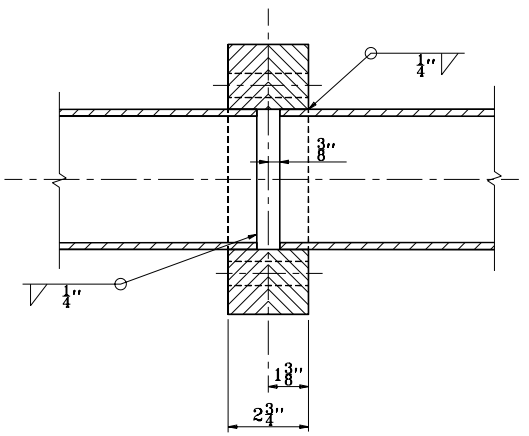

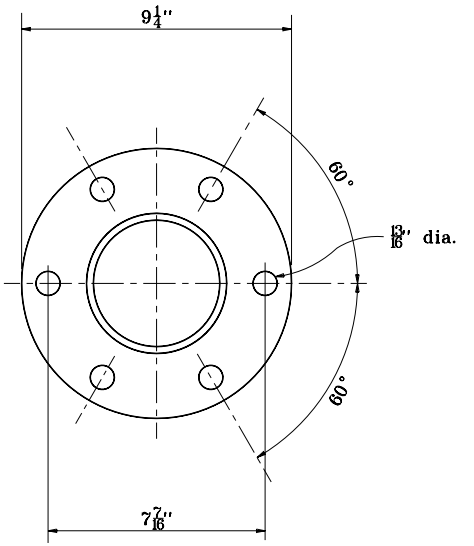

SPLICE DETAIL

INDIANA DEPARTMENT OF TRANSPORTATION

ALUMINUM STRUCTURE SPLICE DETAIL

SEPTEMBER 2001

STANDARD DRAWING NO. **E 802-SNOH-11**

ANTHONY L. UREMOVICH REGISTERED No. 18095 STATE OF INDIANA PROFESSIONAL ENGINEER

DESIGN STANDARDS ENGINEER

/s/ Anthony L. Uremovich 9-04-01
DESIGN STANDARDS ENGINEER DATE

/s/ Firooz Zandi 9-04-01
CHIEF HIGHWAY ENGINEER DATE