GENERAL NOTES

1. Drill and tap (thru) two-$\frac{1}{8}$" dia. holes with $\frac{3}{16}$" threads.
2. Two-Stainless Steel $\frac{3}{16}$" x $\frac{1}{2}$" dia. round-head phillips machine screws required.
3. Sand-Cast Aluminum Alloy.

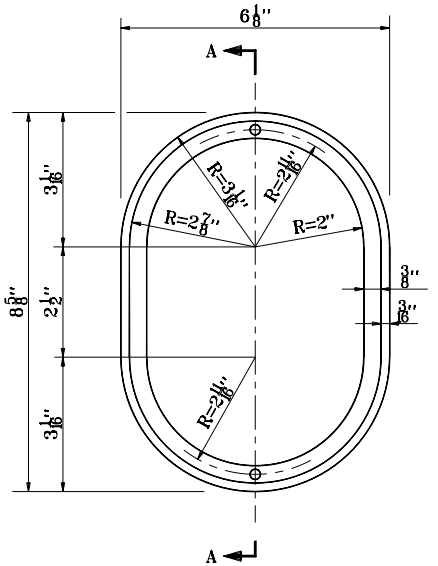

ELECTRICAL CONDULET

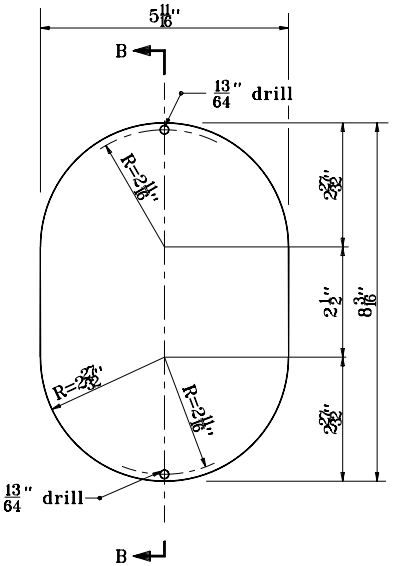

CONDULET COVER

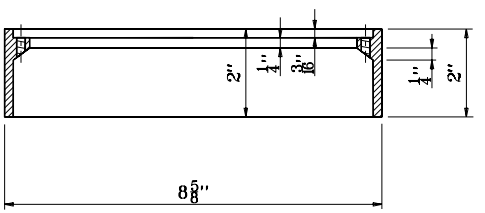

SECTION A-A

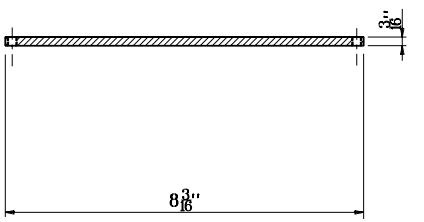

SECTION B-B

INDIANA DEPARTMENT OF TRANSPORTATION

ALUMINUM STRUCTURE CONDULET DETAILS

SEPTEMBER 2001

STANDARD DRAWING NO. E 802-SNOH-09

ANTHONY L. UREMOVICH REGISTERED No. 18095 STATE OF INDIANA PROFESSIONAL ENGINEER

DESIGN STANDARDS ENGINEER

/s/ Anthony L. Uremovich 9-04-01
DESIGN STANDARDS ENGINEER DATE

/s/ Firooz Zandi 9-04-01
CHIEF HIGHWAY ENGINEER DATE