GENERAL NOTES

1. For connection details see Sign Wiring Details on the plans.

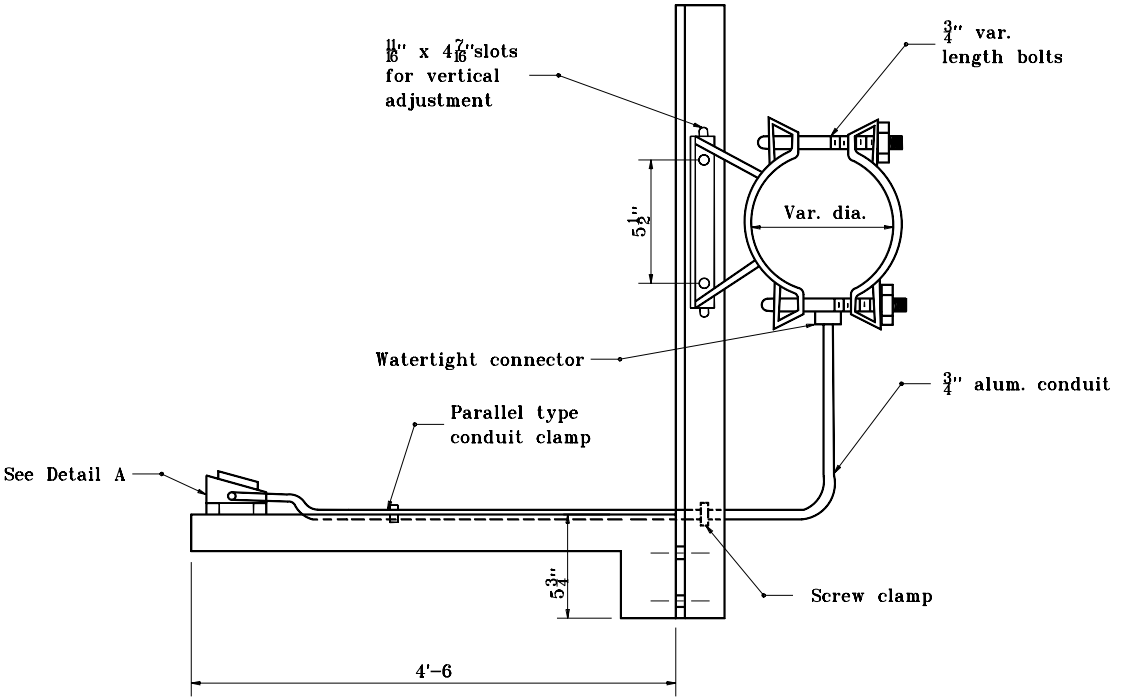

CONDUIT / LIGHTING DETAIL
(For single arm or beam sign bracket)

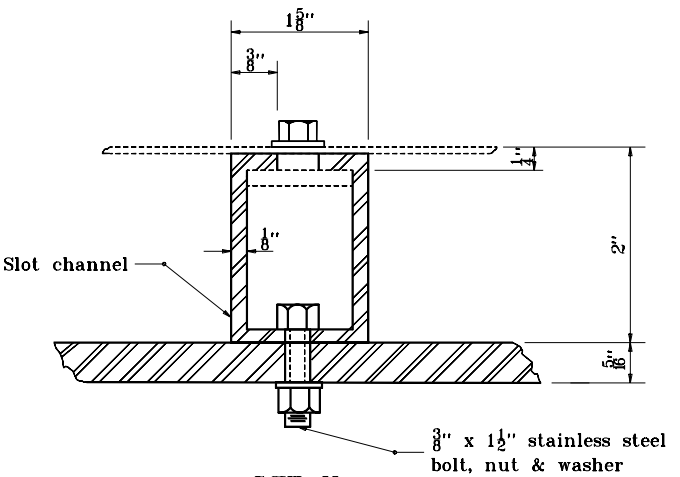

DETAIL A

INDIANA DEPARTMENT OF TRANSPORTATION	
CONDUIT / LIGHTING	
SEPTEMBER 2001	
STANDARD DRAWING NO. **E 802-SNIL-07**	
ANTHONY L. UREMOVICH REGISTERED No. 18095 STATE OF INDIANA PROFESSIONAL ENGINEER DESIGN STANDARDS ENGINEER	/s/ Anthony L. Uremovich — DESIGN STANDARDS ENGINEER — 9-04-01 DATE /s/ Firooz Zandi — CHIEF HIGHWAY ENGINEER — 9-04-01 DATE