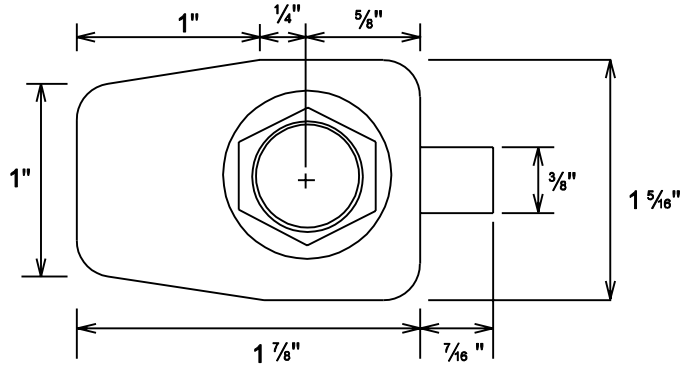

PLAN VIEW

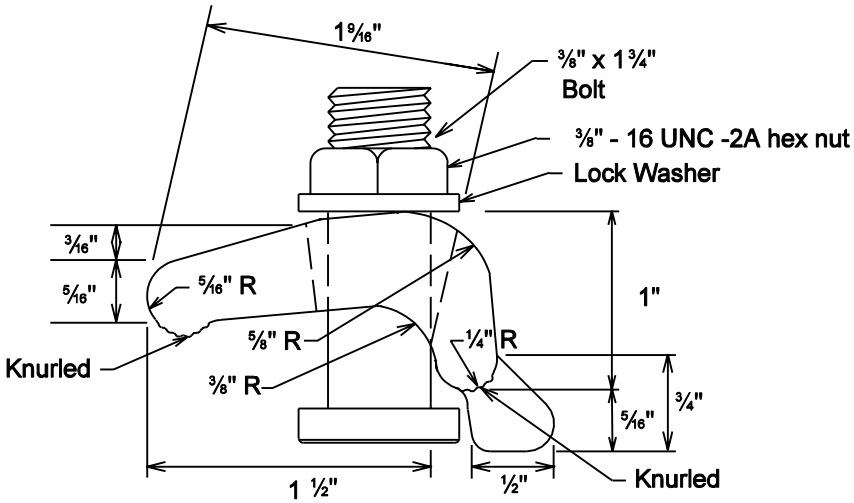

ELEVATION VIEW

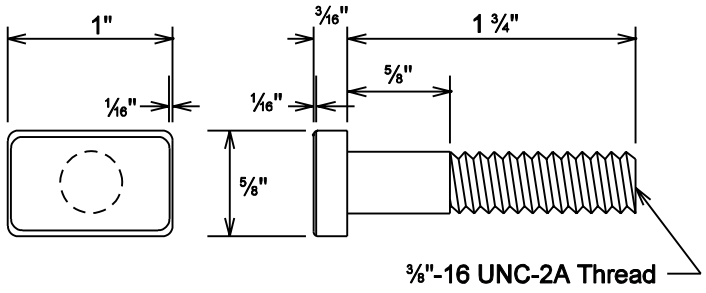

TOP VIEW

SIDE VIEW

POST CLIP BOLT

INDIANA DEPARTMENT OF TRANSPORTATION

Panel Sign Post Clip

MARCH 2002

STANDARD DRAWING NO. E 802-SNGP-10A

RICHARD L. VanCLEAVE REGISTERED No. 9750 STATE OF INDIANA PROFESSIONAL ENGINEER

DESIGN STANDARDS ENGINEER

/s/ Richard L. VanCleave 3-01-02
DESIGN STANDARDS ENGINEER DATE

/s/ Richard K. Smutzer 3-01-02
CHIEF HIGHWAY ENGINEER DATE