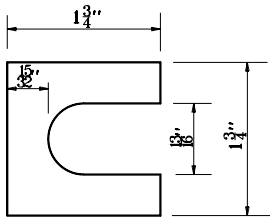

Furnish 2–0.30 ± thick and 2–0.8 ± thick shims per post.

SHIM DETAIL

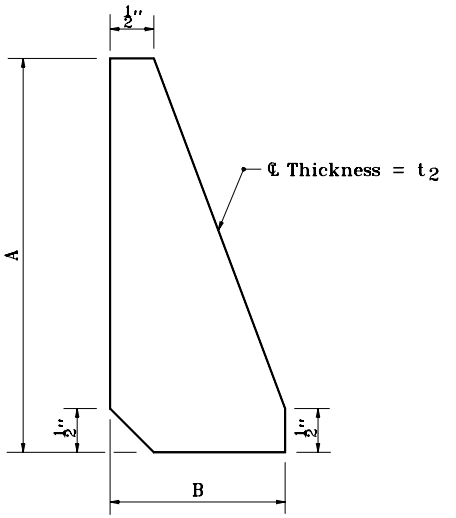

STIFFENER PLATE DETAIL

(See table on Std. Dwg. No. E 802–SNGP–05 for dimensions and weight)

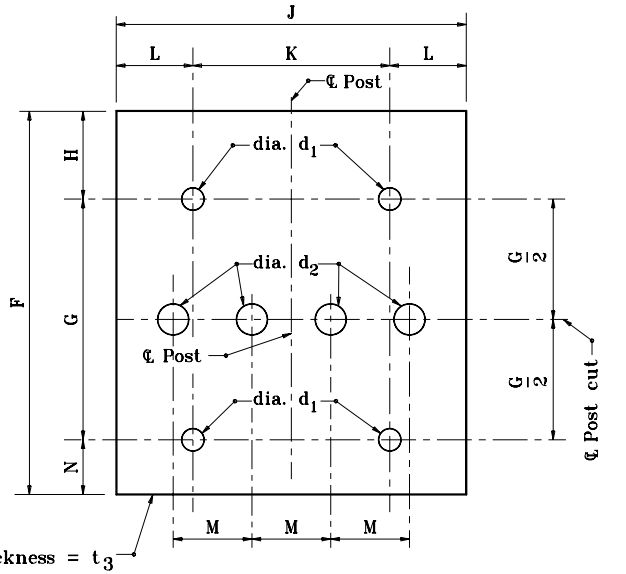

Use H.S. bolts with hex head, & hex nut, one flat washer under each bolt head and bevel or flat washer (where required) under nut.

PERFORATED FUSE PLATE DETAIL

(See table on Std. Dwg. No. E 802–SNGP–06 for dimensions and weight)

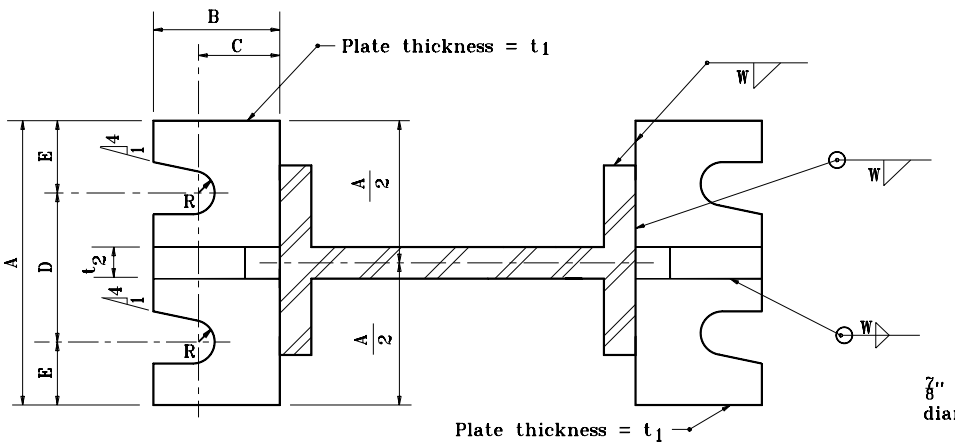

BASE PLATE DETAIL

(See table on Std. Dwg. No. E 802–SNGP–05 for dimensions and weight)

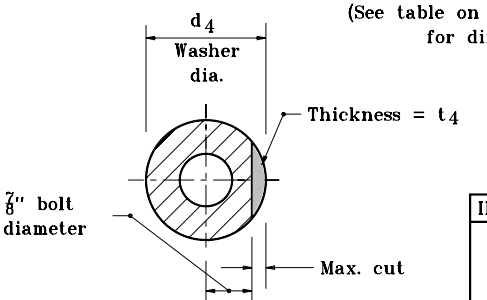

NOTE: The inside diameter of washer is equal to bolt diameter plus 1/16 in.

CLIPPED WASHER DETAIL

(See table for dimensions)

INDIANA DEPARTMENT OF TRANSPORTATION

SIGN DETAILS

MAY 2000

STANDARD DRAWING NO. **E 802–SNGP–04**

ANTHONY L. UREMOVICH REGISTERED No. 18095 STATE OF INDIANA PROFESSIONAL ENGINEER

DESIGN STANDARDS ENGINEER

/s/ Anthony L. Uremovich — DESIGN STANDARDS ENGINEER — 5–01–00 DATE

/s/ Firooz Zandi — CHIEF HIGHWAY ENGINEER — 5–01–00 DATE