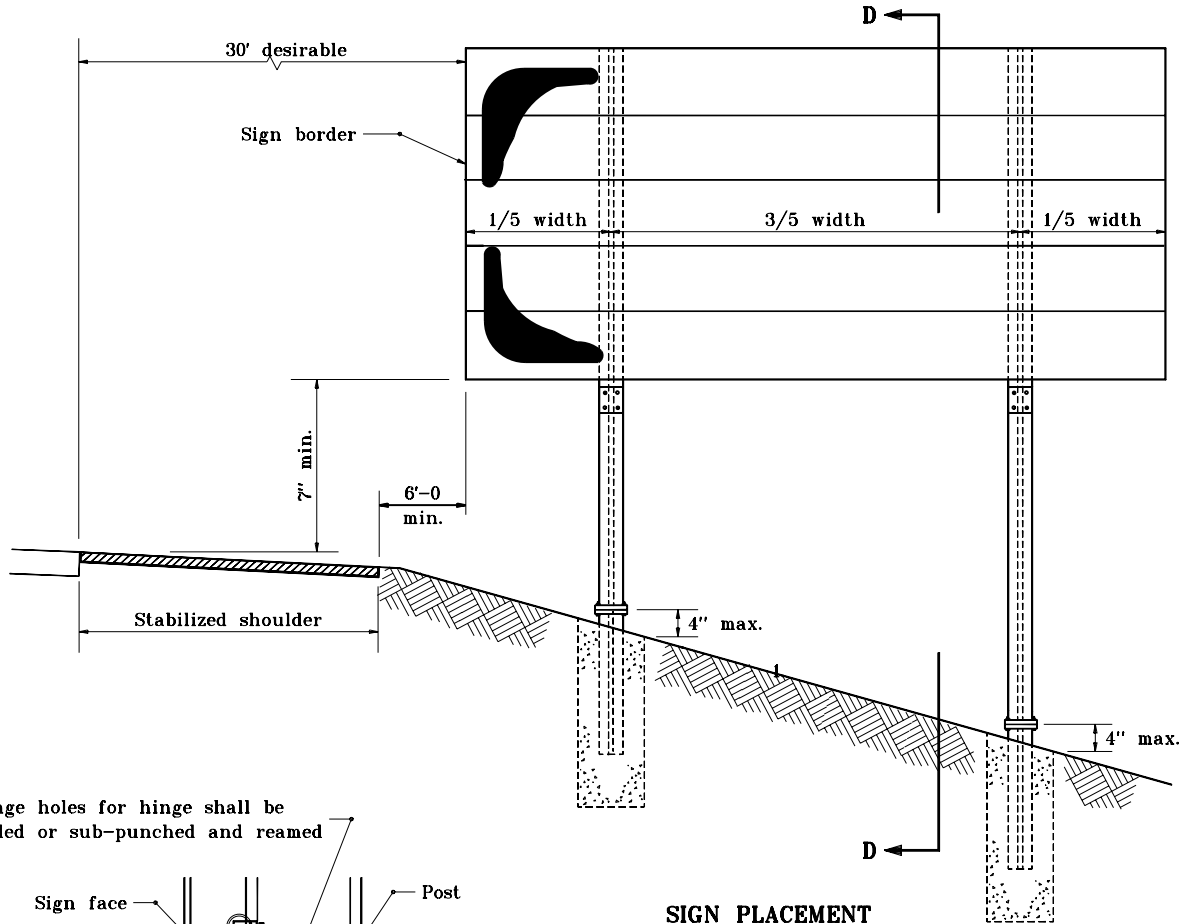

SIGN PLACEMENT
Double Support Sign (Large)

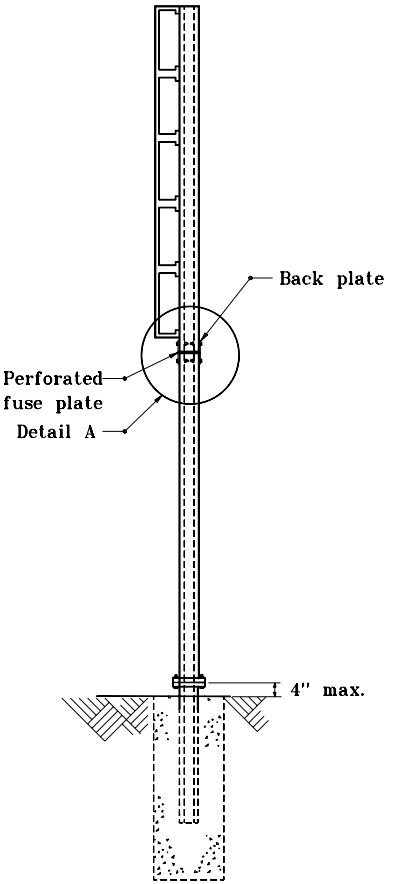

SECTION D-D

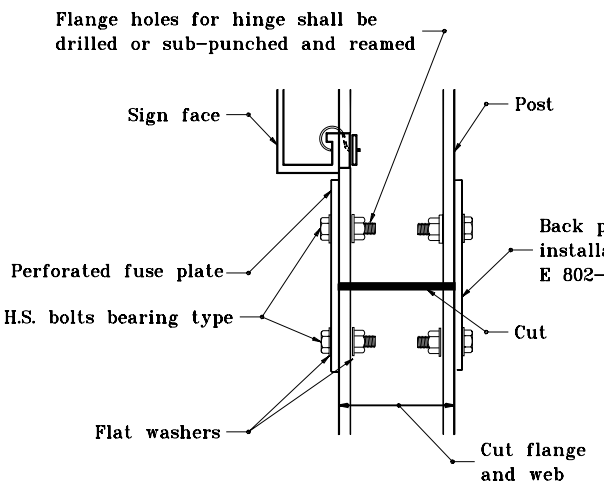

DETAIL A

GENERAL NOTES

1. No more than one W10 x 19 or larger post can be used in a 8 ft. path. No more than two W8 x 18 or smaller posts can be used in a 8 ft. mm path. See Std. Dwg. Nos. E 802-SNGP-09 and 10 for maximum base plate projection above ground.

2. For non-divided highway installation, use a fuse plate instead of a back plate.

INDIANA DEPARTMENT OF TRANSPORTATION

SIGN PLACEMENT

MAY 2000

STANDARD DRAWING NO. **E 802-SNGP-01**

ANTHONY L. UREMOVICH REGISTERED No. 18095 STATE OF INDIANA PROFESSIONAL ENGINEER

DESIGN STANDARDS ENGINEER

/s/ Anthony L. Uremovich 5-01-00
DESIGN STANDARDS ENGINEER DATE

/s/ Firooz Zandi 5-01-00
CHIEF HIGHWAY ENGINEER DATE