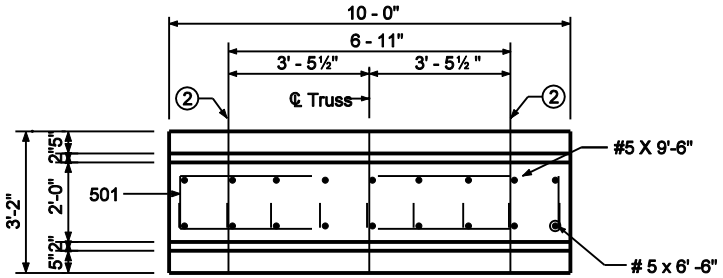

PLAN

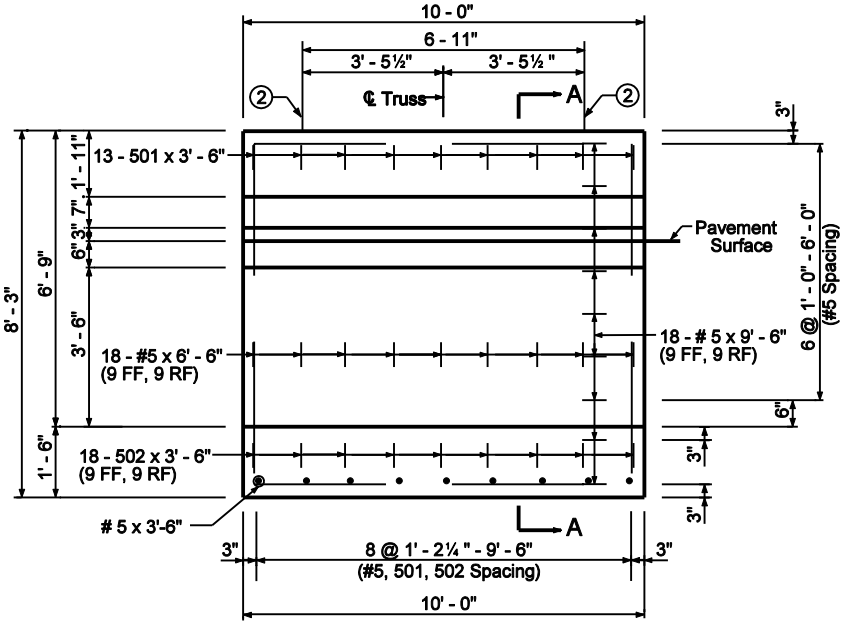

ELEVATION

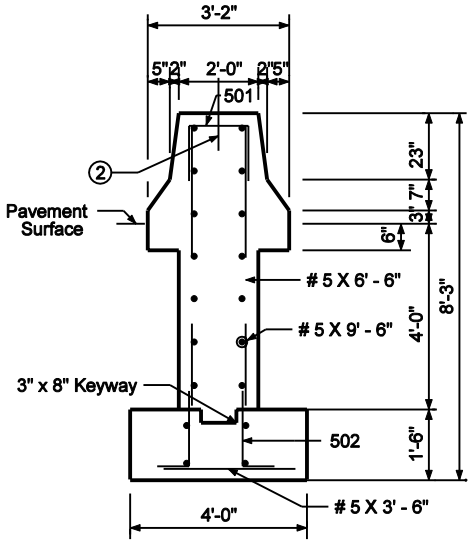

SECTION A-A

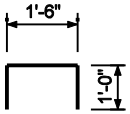

501 x 3'-6"

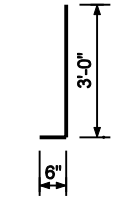

502 x 3'-6"

Notes:

1. For barrier wall width transition see Standard Drawing E 602-CCMB-03.

② ℄ Anchor Bolt.

INDIANA DEPARTMENT OF TRANSPORTATION

BOX TRUSS SIGN FOUNDATION FOR 33" CONC. BARRIER WALL TYPE V-A

MARCH 2003

STANDARD DRAWING NO. E 802-SNBF-03

RICHARD L. VanCLEAVE REGISTERED No. 9750 STATE OF INDIANA PROFESSIONAL ENGINEER

DESIGN STANDARDS ENGINEER

/s/ Richard L. VanCleave 3-03-03
DESIGN STANDARDS ENGINEER DATE

/s/ Richard K. Smutzer 3-03-03
CHIEF HIGHWAY ENGINEER DATE