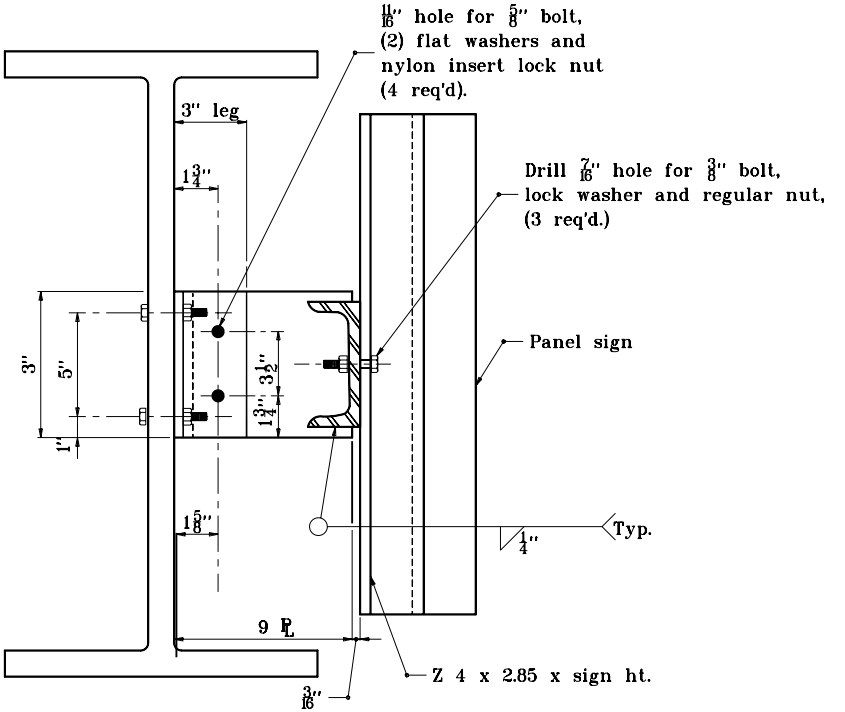

SECTION D–D

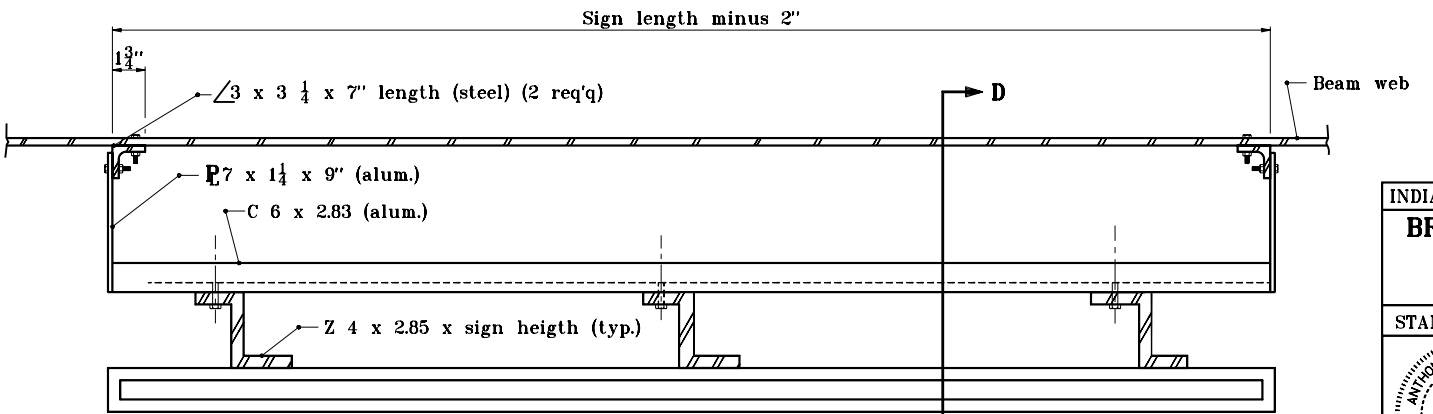

PLAN (TYPE B)
0° CONNECTION

INDIANA DEPARTMENT OF TRANSPORTATION

BRIDGE BRACKET ASSY. FOR CROSS-ROAD SIGNING

SEPTEMBER 2001

STANDARD DRAWING NO. E 802-SNBB-03

ANTHONY L. UREMOVICH REGISTERED No. 18095 STATE OF INDIANA PROFESSIONAL ENGINEER

DESIGN STANDARDS ENGINEER

/s/ Anthony L. Uremovich 9-04-01
DESIGN STANDARDS ENGINEER DATE

/s/ Firooz Zandi 9-04-01
CHIEF HIGHWAY ENGINEER DATE