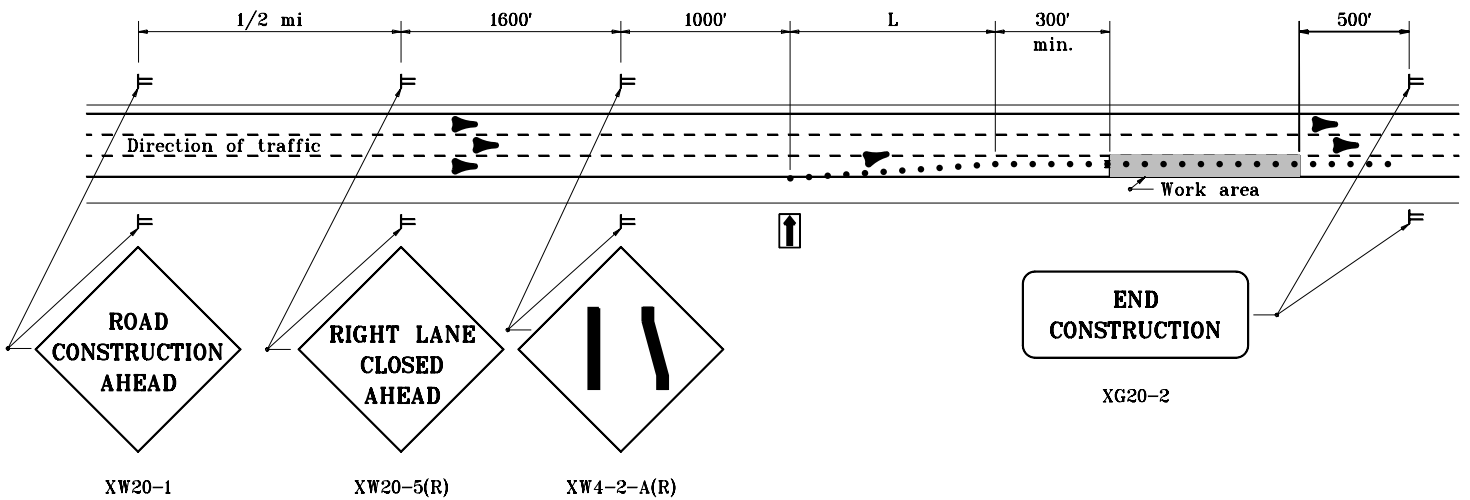

TYPICAL APPLICATION ON 6 - LANE DIVIDED HIGHWAY WHERE RIGHT LANE IS CLOSED

GENERAL NOTES

1. All lanes are to be open after daylight working hours.
2. See Standard Drawiog E 801-TCLG-01 for standard notes and legend.

INDIANA DEPARTMENT OF TRANSPORTATION

DAYLIGHT LANE CLOSURES
RIGHT LANE CLOSED
MAY 1997

STANDARD DRAWING NO. **E 801-TCLC-05**

ANTHONY L. UREMOVICH REGISTERED No. 18095 STATE OF INDIANA PROFESSIONAL ENGINEER

DESIGN STANDARDS ENGINEER

DETAILS PLACED IN THIS FORMAT	11-15-99
/s/ Anthony L. Uremovich DESIGN STANDARDS ENGINEER	11-15-99 DATE
/s/ Firooz Zandi CHIEF HIGHWAY ENGINEER	11-15-99 DATE
ORIGINALLY APPROVED	5-01-97