GENERAL NOTES

1. For additional notes and legends see Standard Drawing E 801-TCLG-01 or E 801-TCDV-02.
2. A Type C warning light will be required on tapers where there is a reduction in the number of lanes and a flashing arrow sign is used..

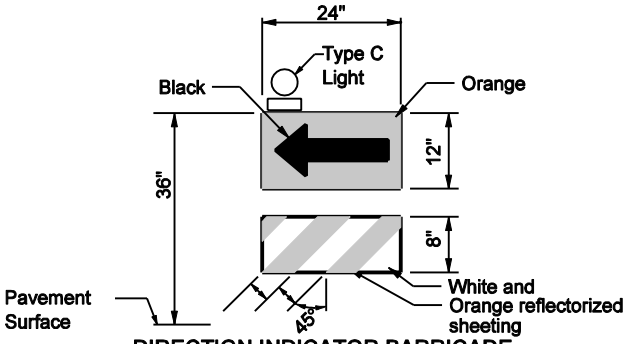

DIRECTION INDICATOR BARRICADE

Use: X

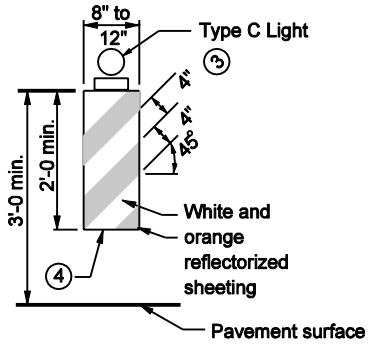

VERTICAL PANEL 9

Use: O O

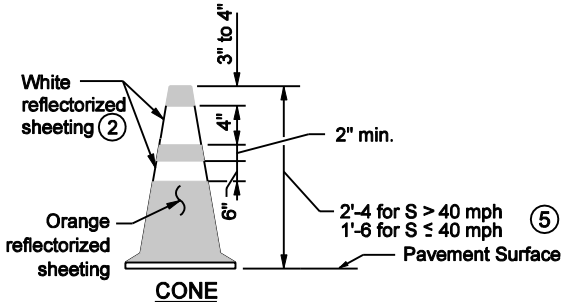

CONE

Use: O X X

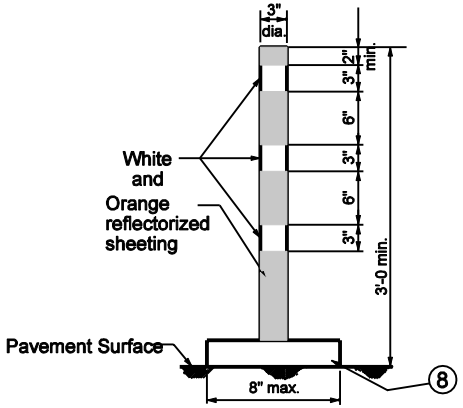

FLEXIBLE TUBULAR MARKER

Use: O X

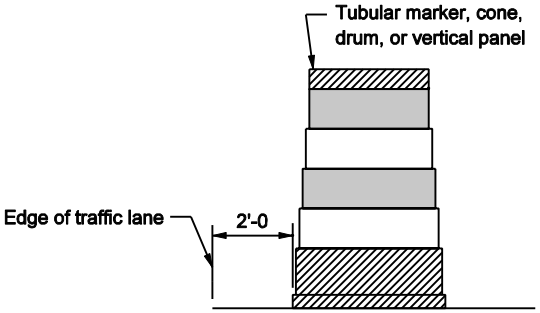

PLACEMENT OF CHANNELIZING DEVICES

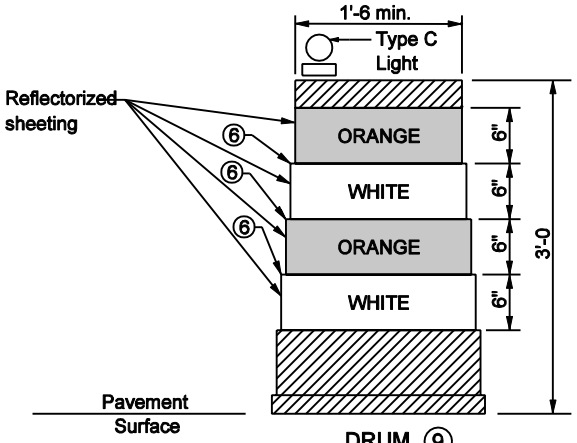

DRUM 9

Use: O X

INDIANA DEPARTMENT OF TRANSPORTATION	
CHANNELIZING DEVICES SEPTEMBER 2002	
STANDARD DRAWING NO. E 801-TCDV-01	
RICHARD L. VanCLEAVE REGISTERED No. 9750 STATE OF INDIANA PROFESSIONAL ENGINEER DESIGN STANDARDS ENGINEER	/s/ Richard L. VanCleave — DESIGN STANDARDS ENGINEER — 9-03-02 DATE /s/ Richard K. Smutzer — CHIEF HIGHWAY ENGINEER — 9-03-02 DATE