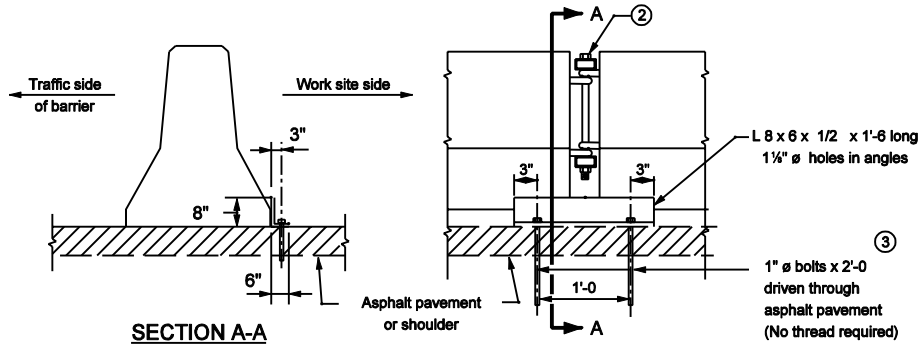

BARRIER ANCHORAGE ON ASPHALT PAVEMENT

NOTES :

1. Anchorage against lateral movement is required for temporary concrete barrier located on concrete or asphalt pavement or shoulder where it is on or within 60 ft. of a bridge or where it is used on flared alignments. The method of anchoring shall be as shown.

② For connection details see Standard Drawing E 801-TCCB-02.

③ Where barrier is on soil the 1"ø anchor bolts shall be 3'-0 long.

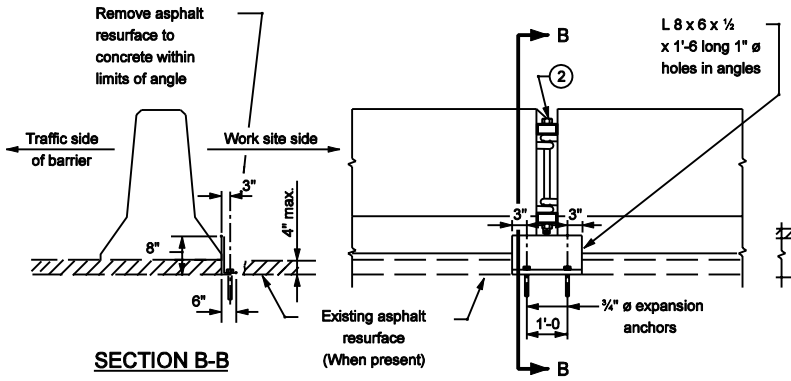

BRIDGE FLOORS AND CONCRETE PAVEMENT
STANDARD METHOD

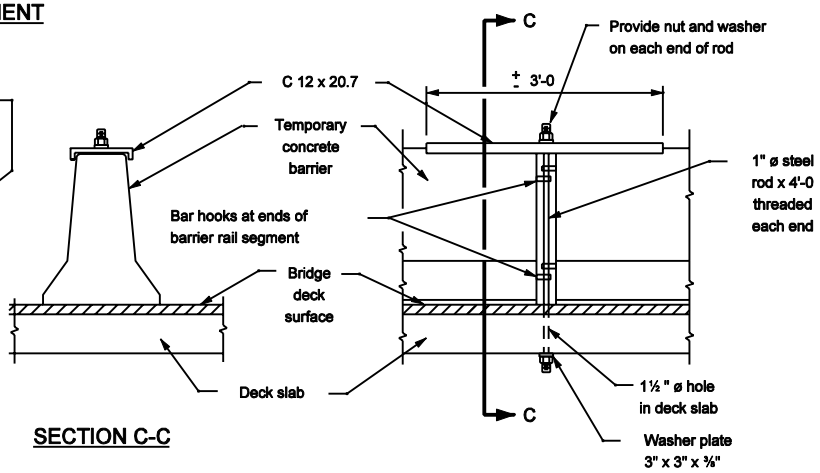

BRIDGE FLOOR ONLY
ALTERNATE METHOD

BARRIER ANCHORAGE ON CONCRETE PAVEMENT

INDIANA DEPARTMENT OF TRANSPORTATION

TEMPORARY CONCRETE BARRIER ANCHORAGE

SEPTEMBER 2002

STANDARD DRAWING NO. E 801-TCCB-04

RICHARD L. VanCleave REGISTERED No. 9750 STATE OF INDIANA PROFESSIONAL ENGINEER

DESIGN STANDARDS ENGINEER

/s/ Richard L. VanCleave 9-03-02
DESIGN STANDARDS ENGINEER DATE

/s/ Richard K. Smutzer 9-03-02
CHIEF HIGHWAY ENGINEER DATE