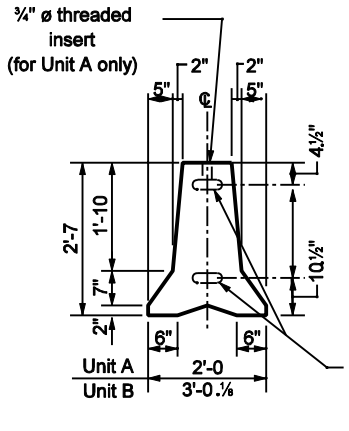

END VIEW A-A

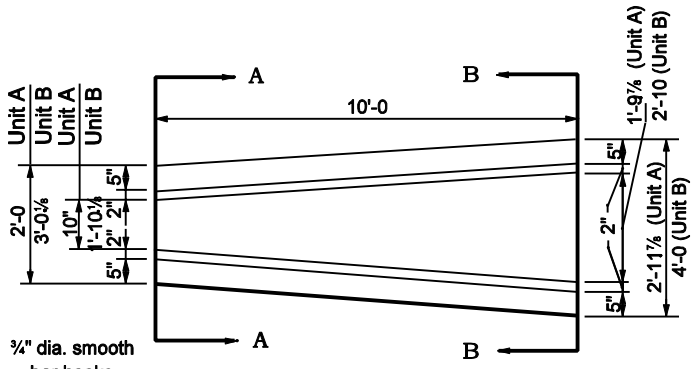

TOP VIEW

Unit A or Unit B

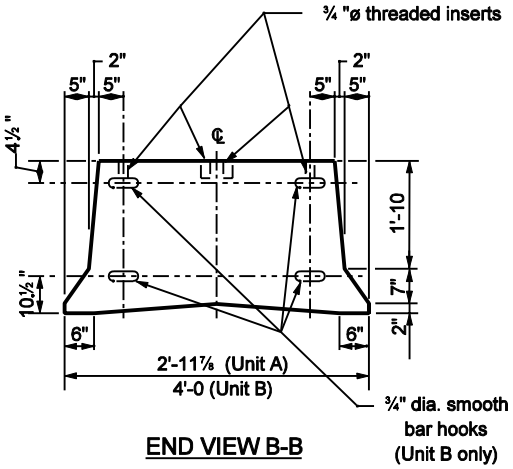

END VIEW B-B

DOUBLE TAPER END SECTION

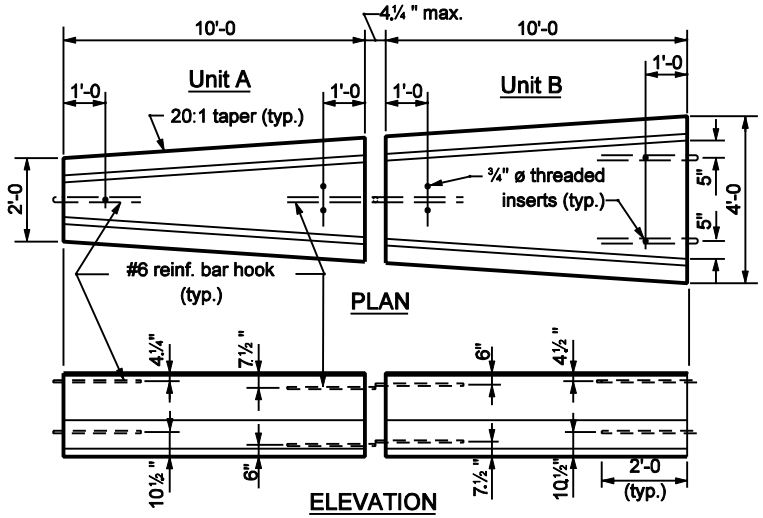

DOUBLE TAPER END SECTION ASSEMBLY

(Showing location of inserts and bar hooks)

NOTES :

1. For connection details see Standard Drawing E 801-TCCB-02.
2. For details of barrier anchorage see Standard Drawing E 801-TCCB-04.
3. Extreme ends of the double taper end assembly require a 1¼ " ø bolt x 2'-3½ " (4" min. thread, hex head and hex nut) for connecting to adjacent temporary concrete barriers.
4. For details of connection between Units A and B, see Standard Drawing E 801-TCCB-02.

INDIANA DEPARTMENT OF TRANSPORTATION

TEMPORARY CONCRETE BARRIER
DOUBLE TAPER END SECTION

SEPTEMBER 2002

STANDARD DRAWING NO. E 801-TCCB-03

RICHARD L. VanCLEAVE REGISTERED No. 9750 STATE OF INDIANA PROFESSIONAL ENGINEER

DESIGN STANDARDS ENGINEER

/s/ Richard L. VanCleave 9-03-02
DESIGN STANDARDS ENGINEER DATE

/s/ Richard K. Smutzer 9-03-02
CHIEF HIGHWAY ENGINEER DATE