GENERAL NOTES

1. PVC pipe shall be 6" Schedule 40 Class 12454-B.
2. See detail drawings for drain spacings.

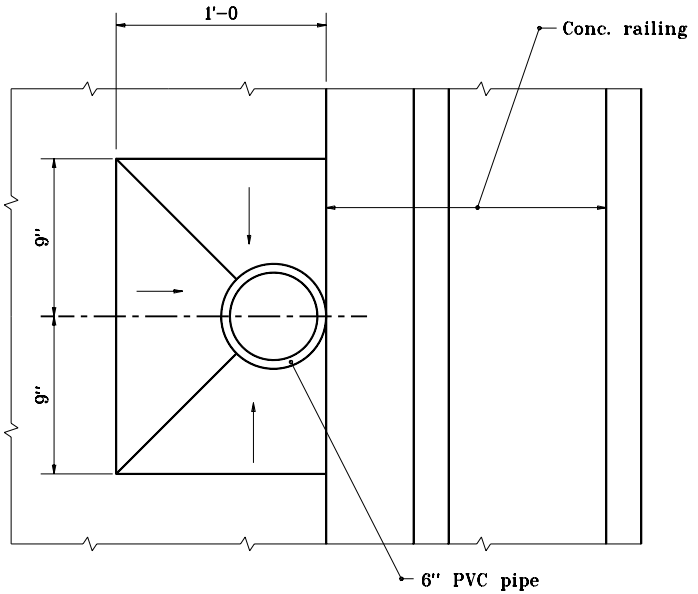

PLAN

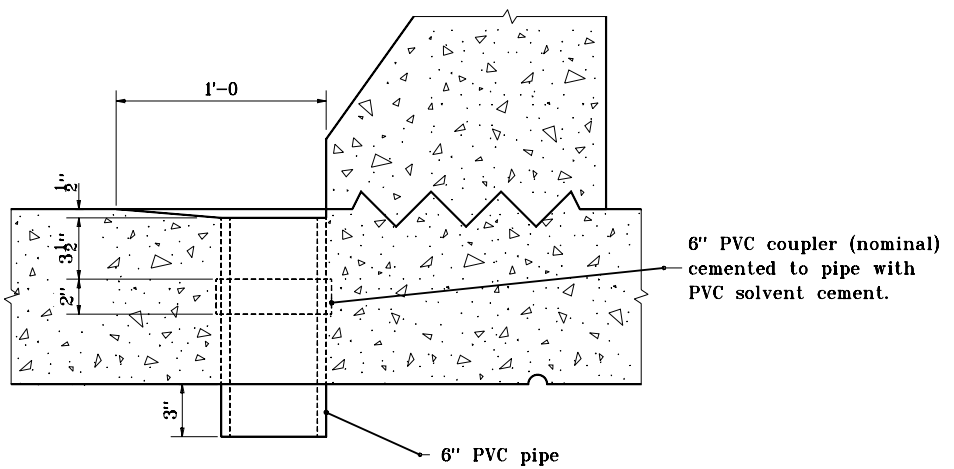

SECTION THRU FLOOR DRAIN

INDIANA DEPARTMENT OF TRANSPORTATION

SLAB BRIDGE FLOOR DRAIN DETAIL

SEPTEMBER 1994

STANDARD DRAWING NO. **E 724-BJTS-07**

ANTHONY L. UREMOVICH REGISTERED No. 18095 STATE OF INDIANA PROFESSIONAL ENGINEER

DESIGN STANDARDS ENGINEER

DETAILS PLACED IN THIS FORMAT 11-15-99

/s/ Anthony L. Uremovich 11-15-99
DESIGN STANDARDS ENGINEER DATE

/s/ Firooz Zandi 11-15-99
CHIEF HIGHWAY ENGINEER DATE

ORIGINALLY APPROVED 9-30-94