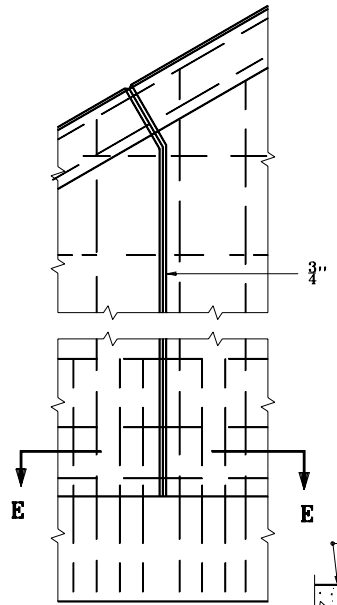

WING–FRONT FACE

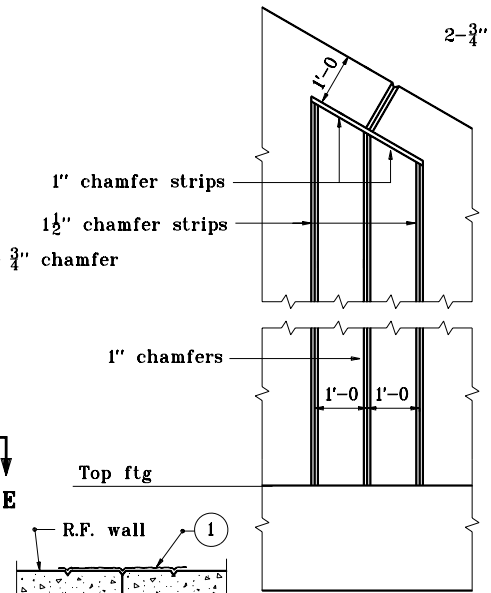

WING–REAR FACE

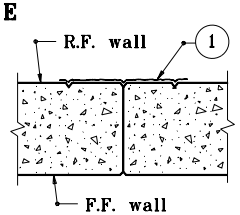

SECTION E–E

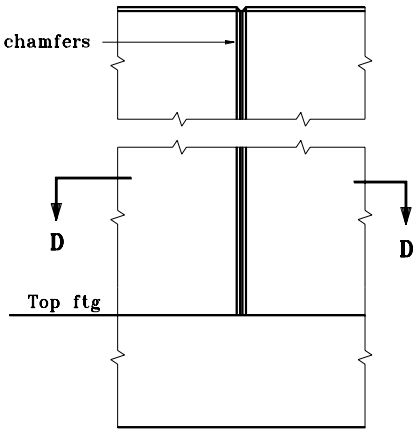

FRONT FACE

NOTES :

1. Fabric to cover entire construction joint. Caulk securely into grooves. Fabric and V–Strips to be placed at construction joints in mudwall of R.C.G. superstructures.
2. Expansion material in joints is preformed joint filler.
3. Copper flashing is to be lapped 2" and soldered, subject to approval.

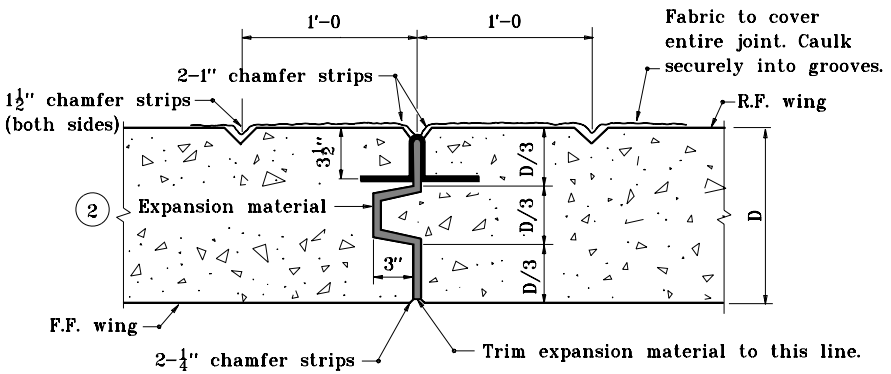

SECTION D–D

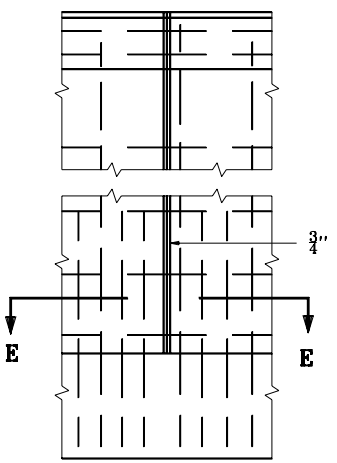

ABUTMENT–FRONT FACE

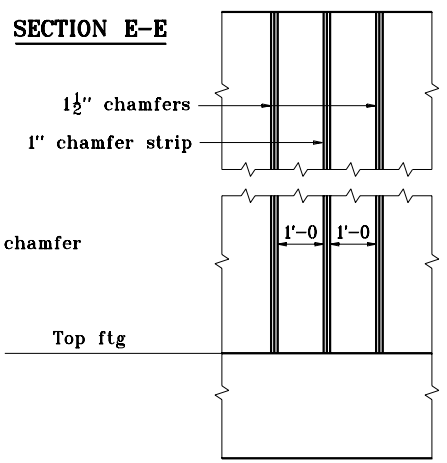

ABUTMENT–REAR FACE

CONSTRUCTION JOINT DETAIL

3 1'–0 wide.
16 oz. soft copper flashing

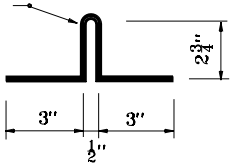

BENDING DIAGRAM

EXPANSION JOINT DETAILS

INDIANA DEPARTMENT OF TRANSPORTATION

CONSTRUCTION & EXPANSION JOINT DETAILS

MAY 2000

STANDARD DRAWING NO. **E 724–BJTS–05**

ANTHONY L. UREMOVICH REGISTERED No. 18095 STATE OF INDIANA PROFESSIONAL ENGINEER

DESIGN STANDARDS ENGINEER

/s/ Anthony L. Uremovich 11–15–99
DESIGN STANDARDS ENGINEER DATE

/s/ Firooz Zandi 11–15–99
CHIEF HIGHWAY ENGINEER DATE