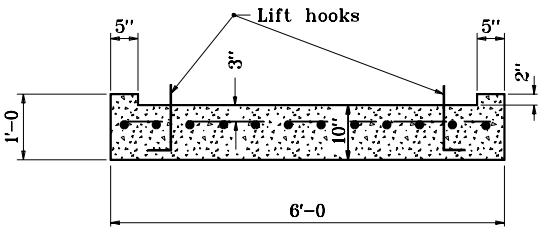

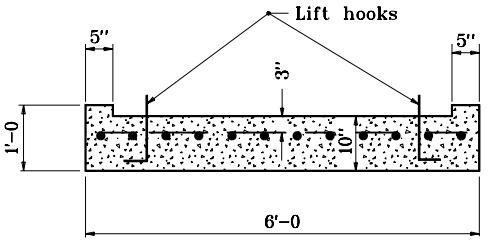

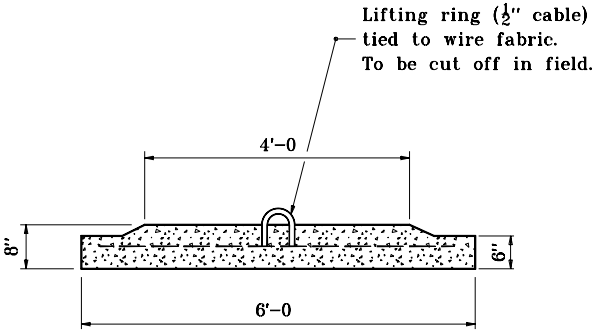

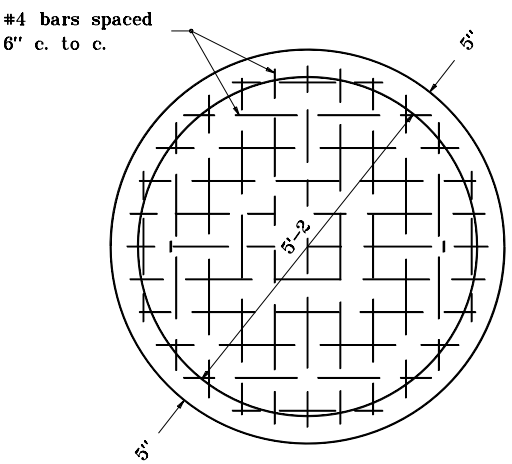

ROUND

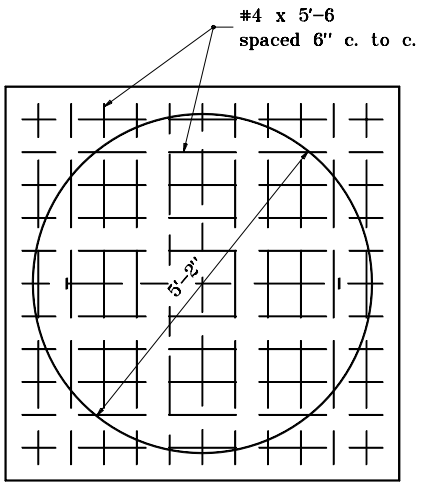

SQUARE

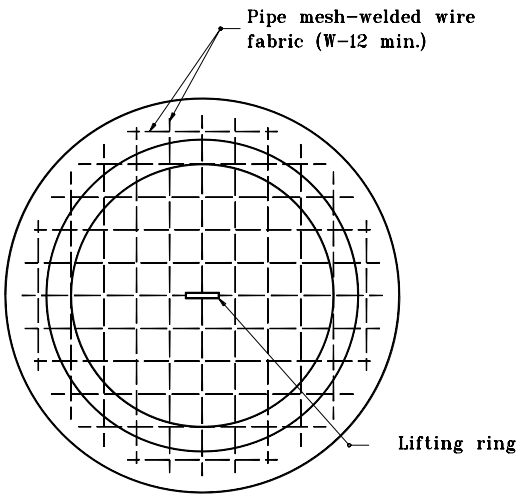

ROUND ALTERNATE

INDIANA DEPARTMENT OF TRANSPORTATION

PRECAST MANHOLE BOTTOM SECTION

SEPTEMBER 1997

STANDARD DRAWING NO. **E 720-MHST-07**

ANTHONY L. UREMOVICH REGISTERED No. 18095 STATE OF INDIANA PROFESSIONAL ENGINEER

DESIGN STANDARDS ENGINEER

DETAILS PLACED IN THIS FORMAT	11-15-99
/s/ Anthony L. Uremovich DESIGN STANDARDS ENGINEER	11-15-99 DATE
/s/ Firooz Zandi CHIEF HIGHWAY ENGINEER	11-15-99 DATE
ORIGINALLY APPROVED	9-01-97