GENERAL NOTES

1. Brick, block, or concrete may be used.

(2) T = 8" for brick structure
T = 6" for segmental block structure

(3) In special cases or where inlet pipe is required, A_1, B_1, A_2, and B_2 shall be increased or decreased 1'-0, as directed.

(4) 2" pipe drain from bottom of curb to inlet. Aggregate to be placed around inlet end of pipe.

(5) 3". dia. pipe to be kept open for drainage of subgrade or base until surface is placed.

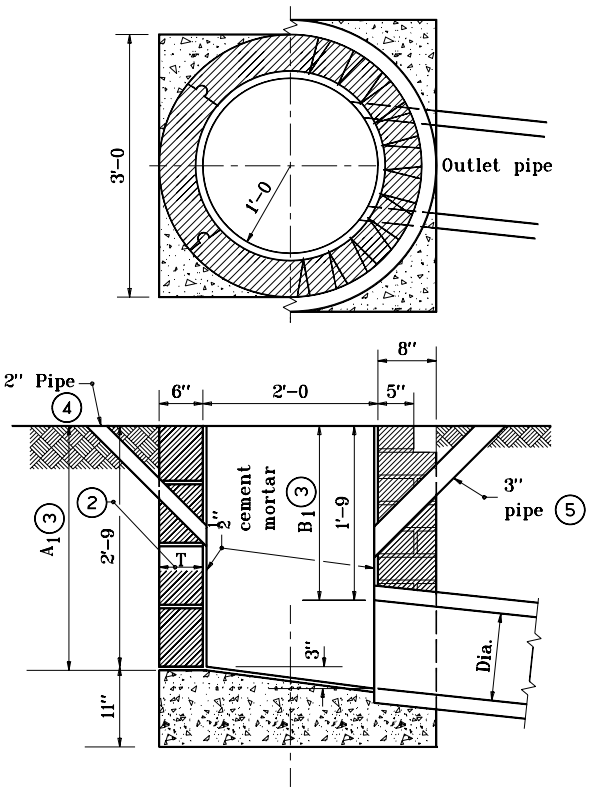

BRICK OR BLOCK

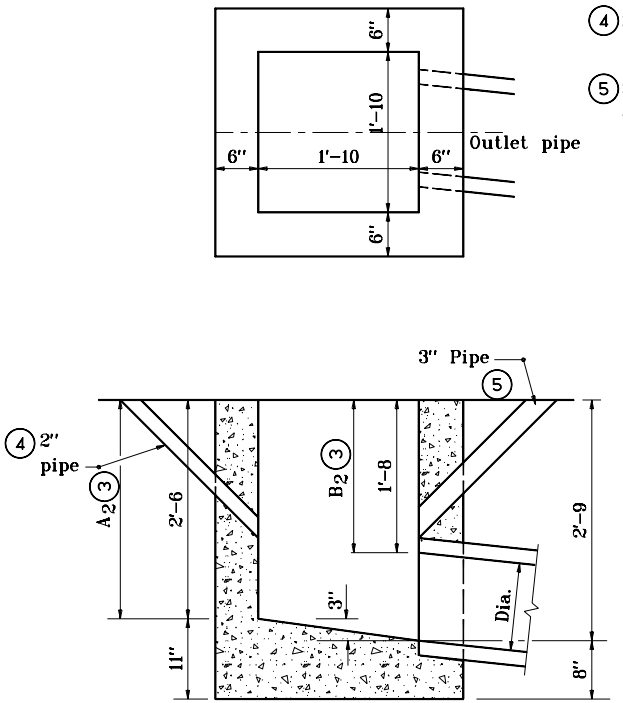

CONCRETE

INDIANA DEPARTMENT OF TRANSPORTATION

INLET TYPE A

APRIL 1995

STANDARD DRAWING NO. E 720-INST-01

ANTHONY L. UREMOVICH REGISTERED No. 18095 STATE OF INDIANA PROFESSIONAL ENGINEER

DESIGN STANDARDS ENGINEER

DETAILS PLACED IN THIS FORMAT	11-15-99
/s/ Anthony L. Uremovich DESIGN STANDARDS ENGINEER	11-15-99 DATE
/s/ Firooz Zandi CHIEF HIGHWAY ENGINEER	11-15-99 DATE
ORIGINALLY APPROVED	4-03-95