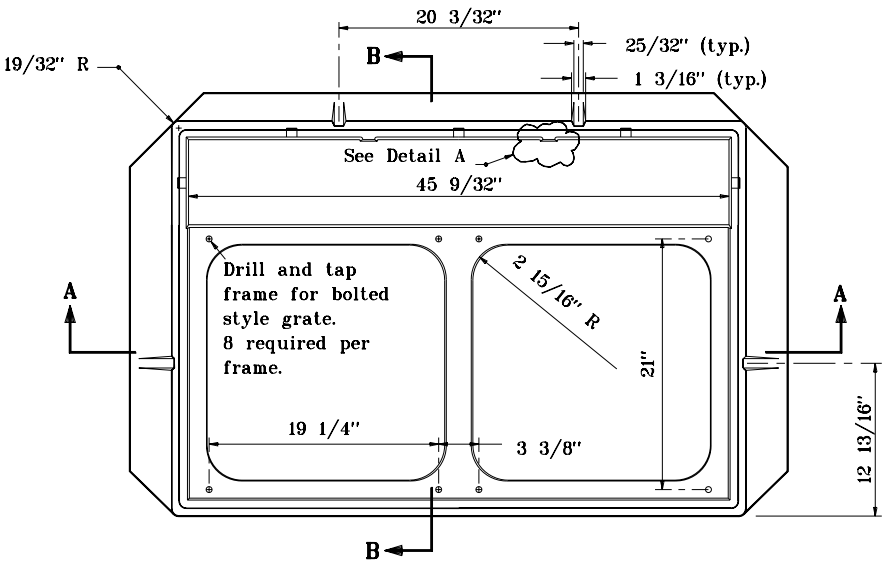

PLAN

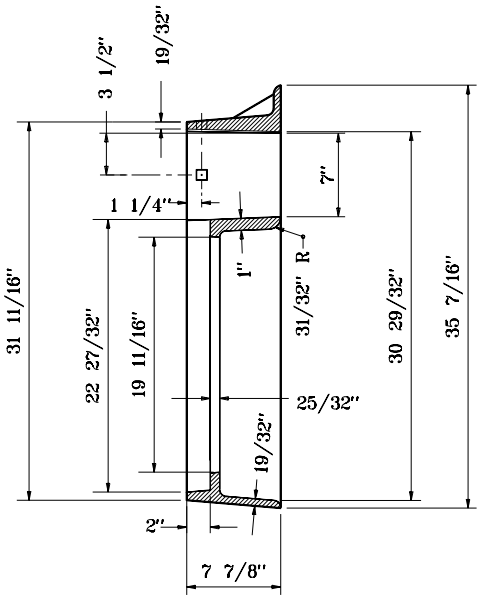

SECTION B–B

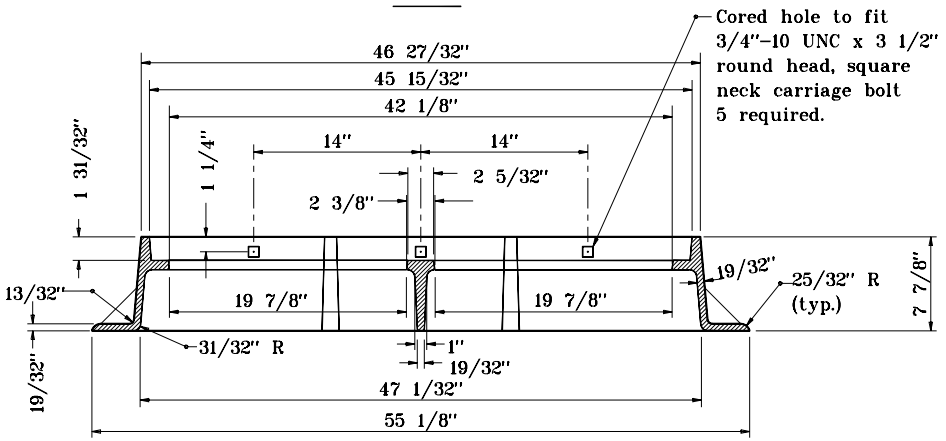

SECTION A–A

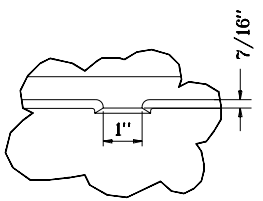

DETAIL A

FRAME
CASTING TYPE 15

INDIANA DEPARTMENT OF TRANSPORTATION

CASTING TYPE 15
FRAME
SEPTEMBER 1998

STANDARD DRAWING NO. **E 720-ICCA-16**

ANTHONY L. UREMOVICH REGISTERED No. 18095 STATE OF INDIANA PROFESSIONAL ENGINEER

DESIGN STANDARDS ENGINEER

DETAILS PLACED IN THIS FORMAT 11-15-99

/s/ Anthony L. Uremovich 11-15-99
DESIGN STANDARDS ENGINEER DATE

/s/ Firooz Zandi 11-15-99
CHIEF HIGHWAY ENGINEER DATE

ORIGINALLY APPROVED 9-01-98