GENERAL NOTES

1. Curb box adjustable 5 1/4" t0 8 3/4".

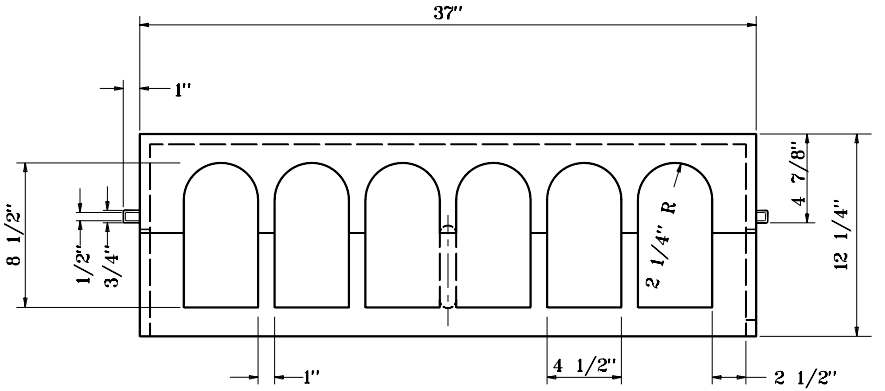

FRONT

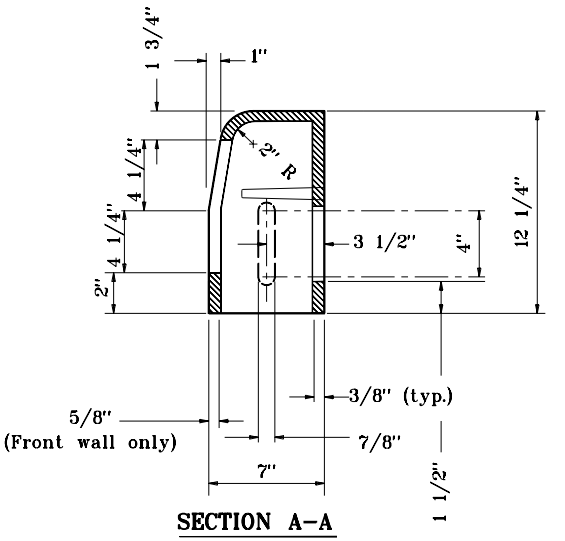

SECTION A-A

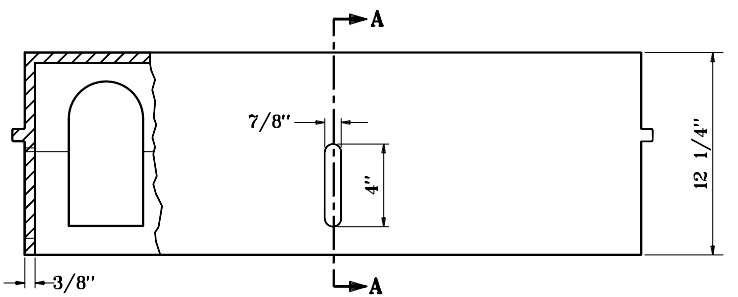

BACK

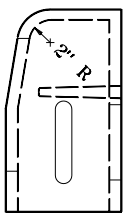

SIDE

CURB BOX
CASTING 10

INDIANA DEPARTMENT OF TRANSPORTATION

CASTING TYPE 10 CURB BOX

SEPTEMBER 1998

STANDARD DRAWING NO. E 720-ICCA-09A

ANTHONY L. UREMOVICH REGISTERED No. 18095 STATE OF INDIANA PROFESSIONAL ENGINEER

DESIGN STANDARDS ENGINEER

DETAILS PLACED IN THIS FORMAT	11-15-99
/s/ Anthony L. Uremovich DESIGN STANDARDS ENGINEER	11-15-99 DATE
/s/ Firooz Zandi CHIEF HIGHWAY ENGINEER	11-15-99 DATE
ORIGINALLY APPROVED	9-01-98