GENERAL NOTES

1. Brick, block, or concrete may be used.
2. Precast catch basin type W may be substituted for catch basin type A.
3. (3) 2" dia. pipe drain from bottom of curb to inlet. Aggregate to be placed around inlet end of pipe.
4. (4) 3" dia. pipe to be kept open for drainage of subgrade or base until surface is placed.
5. Reinforcement required if Dim. A < 2'-6. Reinforcement not required if Dim. A ≥ 2'-6.

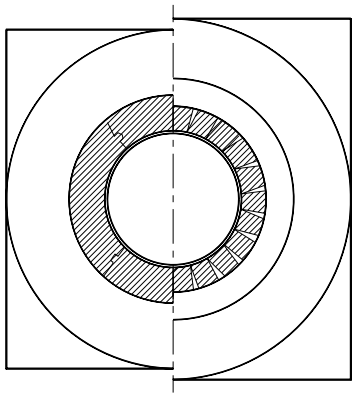

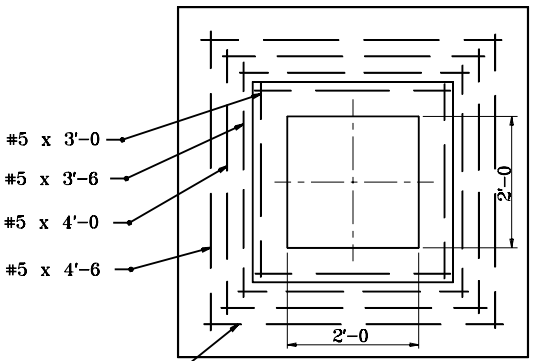

#5 ea. layer

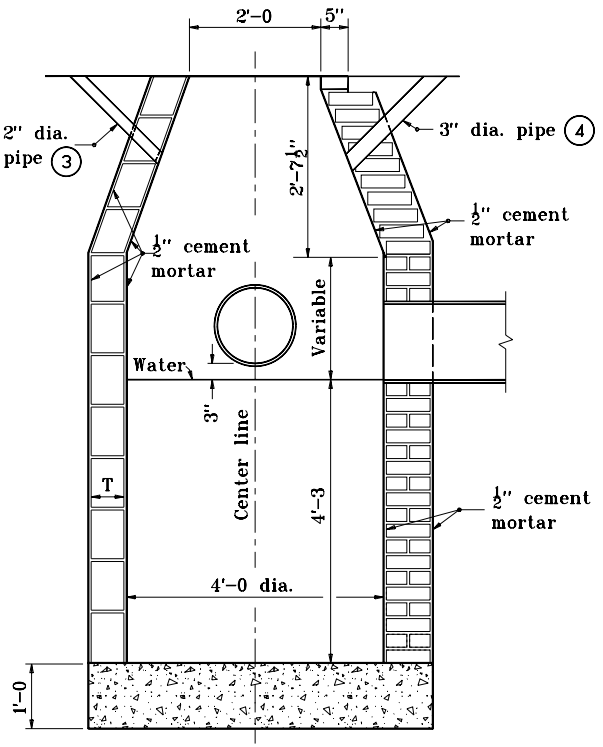

BRICK OR BLOCK

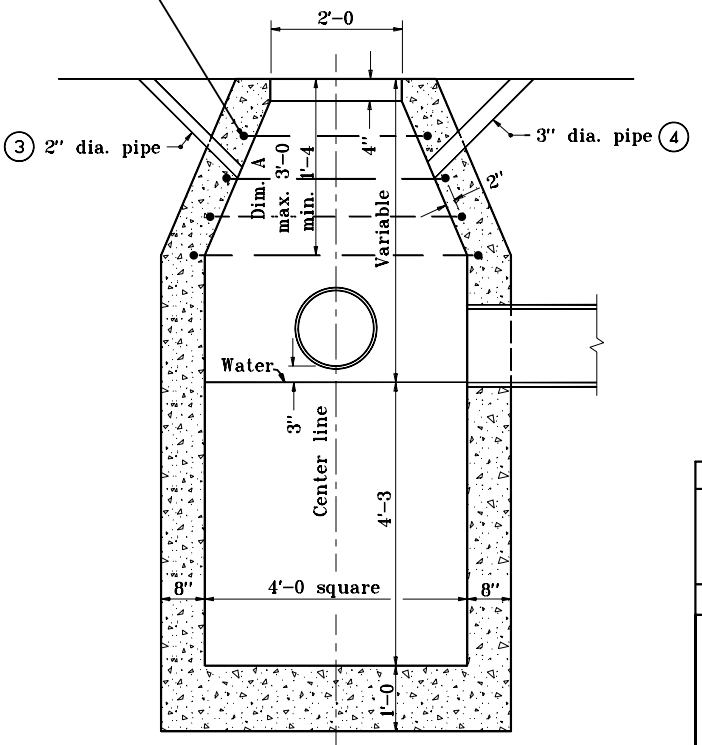

CONCRETE

INDIANA DEPARTMENT OF TRANSPORTATION

CATCH BASIN TYPE A

SEPTEMBER 1997

STANDARD DRAWING NO. E 720-CBST-01

ANTHONY L. UREMOVICH REGISTERED No. 18095 STATE OF INDIANA PROFESSIONAL ENGINEER

DESIGN STANDARDS ENGINEER

DETAILS PLACED IN THIS FORMAT	11-15-99
/s/ Anthony L. Uremovich DESIGN STANDARDS ENGINEER	11-15-99 DATE
/s/ Firooz Zandi CHIEF HIGHWAY ENGINEER	11-15-99 DATE
ORIGINALLY APPROVED	9-02-97