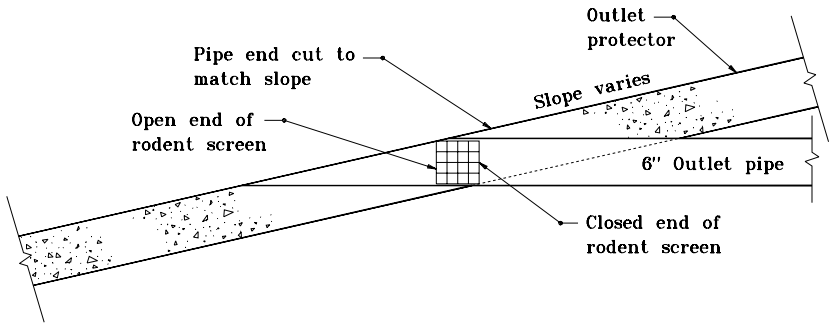

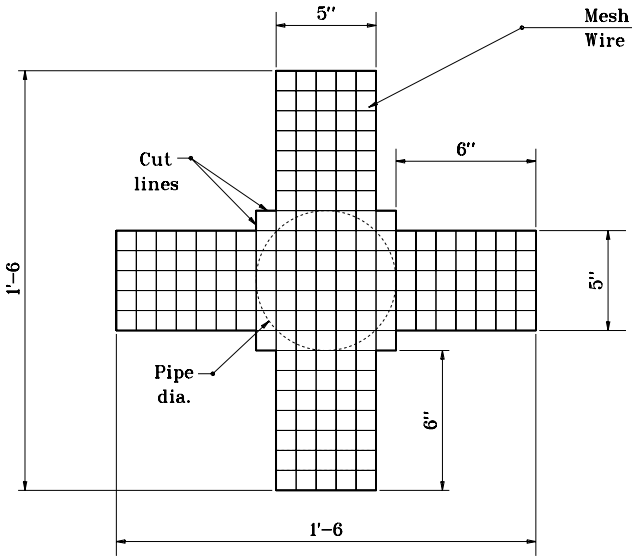

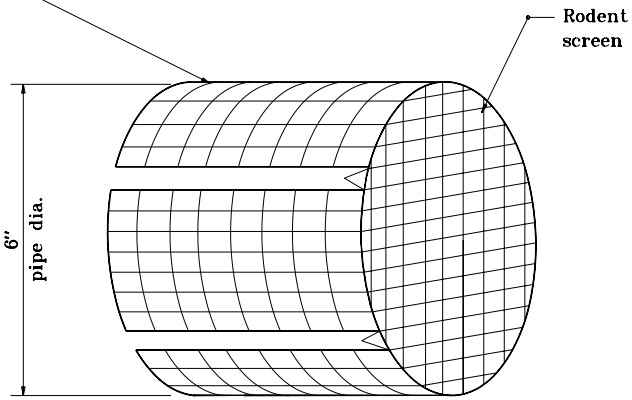

INDIANA DEPARTMENT OF TRANSPORTATION

OUTLET PROTECTOR
RODENT SCREEN

JANUARY 2000

STANDARD DRAWING NO. **E 718-UNDR-06**

ANTHONY L. UREMOVICH REGISTERED No. 18095 STATE OF INDIANA PROFESSIONAL ENGINEER
DESIGN STANDARDS ENGINEER

/s/ Anthony L. Uremovich — DESIGN STANDARDS ENGINEER — 1-03-00 DATE

/s/ Firooz Zandi — CHIEF HIGHWAY ENGINEER — 1-03-00 DATE