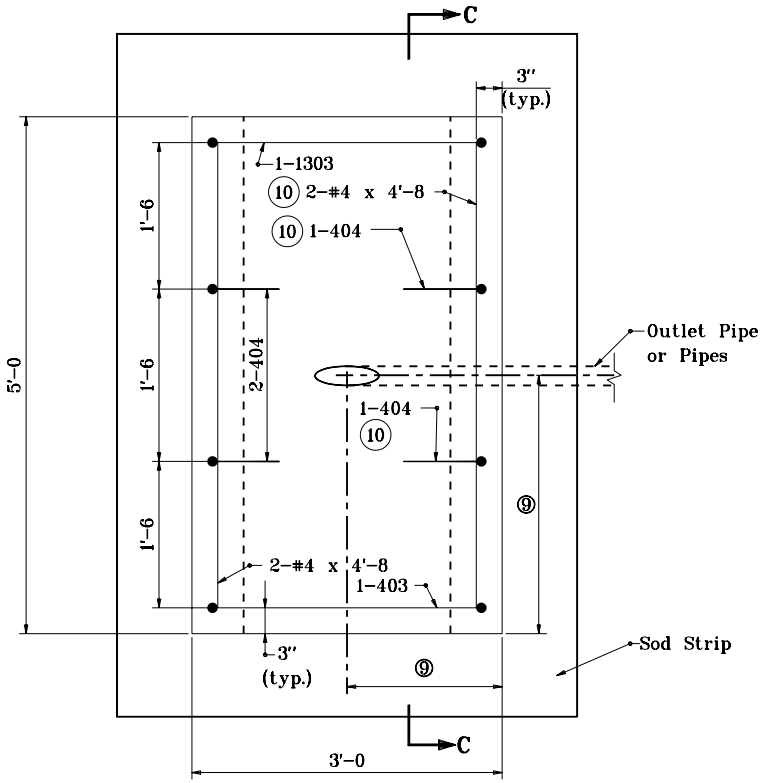

PLAN VIEW

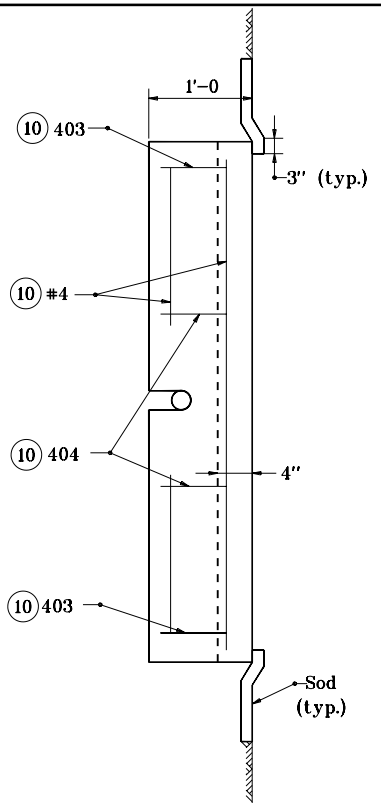

SECTION C-C

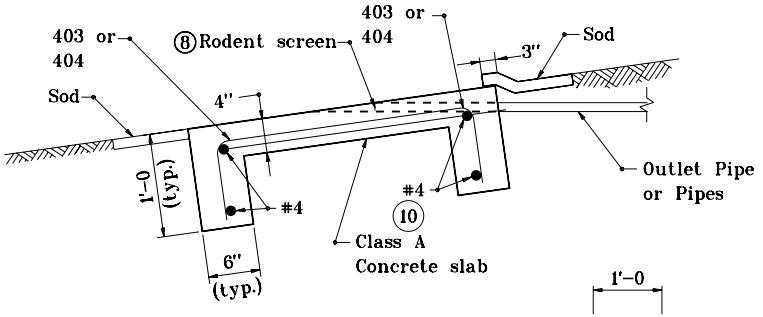

TYPICAL SECTION

NOTE:

1. See Standard Drawing E 718-UNDR-07 for General Notes pertaining to this sheet.

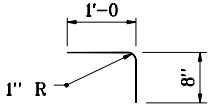

404 x 1'-8

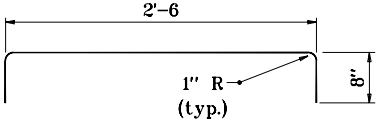

403 x 3'-10

INDIANA DEPARTMENT OF TRANSPORTATION

OUTLET PROTECTOR, TYPE 3

JANUARY 2000

STANDARD DRAWING NO. **E 718-UNDR-05**

ANTHONY L. UREMOVICH REGISTERED No. 18095 STATE OF INDIANA PROFESSIONAL ENGINEER

DESIGN STANDARDS ENGINEER

/s/ Anthony L. Uremovich — DESIGN STANDARDS ENGINEER — 1-03-00 DATE

/s/ Donald W. Lucas — CHIEF HIGHWAY ENGINEER — 1-03-00 DATE