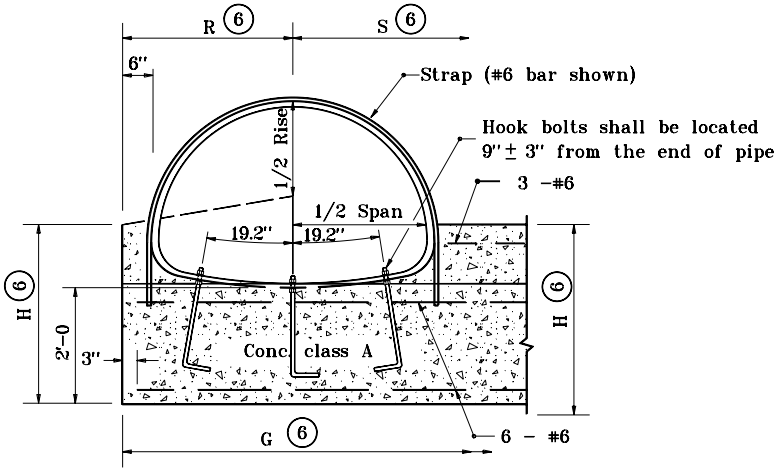

ANCHOR FOR STRUCTURAL PLATE PIPE-ARCH
PARTIAL ELEVATION

GENERAL NOTES

1. Anchor straps shall be used at both upstream and downstream ends of all structural plate pipes and pipe-arches.
2. See Standard Drawing E 715-PASD-01 for anchor strap details.
3. Hook bolts and anchor straps shall be used for all structural plate pipes and pipe-arches with a diameter or span of 84" or greater.
4. See Standard Drawing E 715-PAHB-01 for hook bolt details.
5. Riprap shall be placed at the ends of pipe structures when shown on the plans.

(6) For dimension, enter chart on Standard Drawings E 717-ANCH-01 or E 717-ANCH-02 with known dimension D or span and rise.

INDIANA DEPARTMENT OF TRANSPORTATION

MULTIPLE PIPE CONCRETE ANCHOR

JANUARY 1998

STANDARD DRAWING NO. **E 717-MPCA-02**

ANTHONY L. UREMOVICH REGISTERED No. 18095 STATE OF INDIANA PROFESSIONAL ENGINEER

DESIGN STANDARDS ENGINEER

DETAILS PLACED IN THIS FORMAT 7-27-99

/s/ Anthony L. Uremovich 7-27-99
DESIGN STANDARDS ENGINEER DATE

/s/ Firooz Zandi 7-27-99
CHIEF HIGHWAY ENGINEER DATE

ORIGINALLY APPROVED 1-02-98