GENERAL NOTES

1. Toe plate extension is to be the same thickness as the end section. Dimension shall be end section overall width less 6".
2. Transverse safety bars shall be Schedule 40 galvanized steel pipe. Pipe to be galvanized after forming. Number of bars req'd will vary depending on the length of the end section.
3. See Standard Drawing E 715-SMES-11 for Section A-A.
4. See Standard Drawing E 715-SMES-12 for variable dimensions.

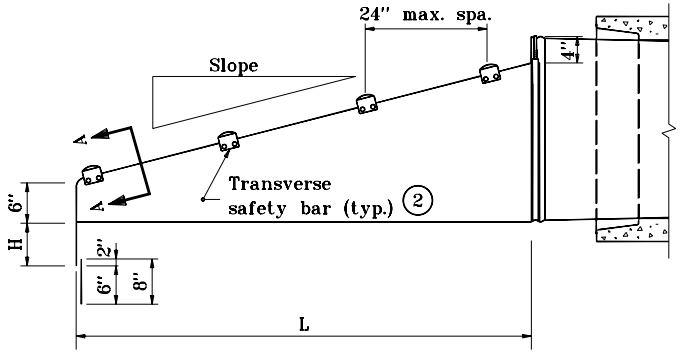

SIDE ELEVATION OF PARALLEL STRUCTURE END SECTION

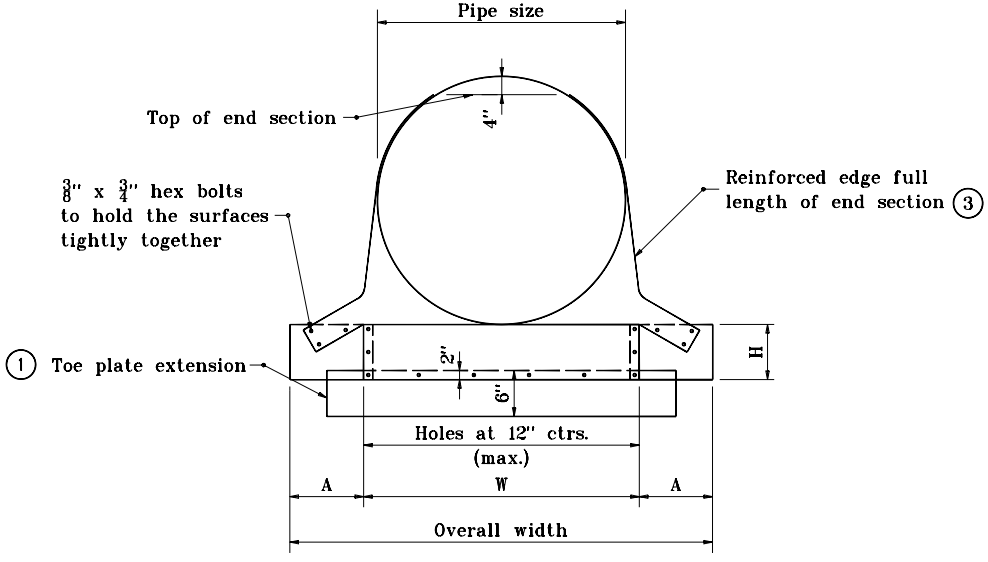

FRONT VIEW

INDIANA DEPARTMENT OF TRANSPORTATION	
SAFETY METAL CULVERT END SECTIONS FOR SMOOTH PIPE	
JANUARY 1998	
STANDARD DRAWING NO. **E 715-SMES-10**	
ANTHONY L. UREMOVICH REGISTERED No. 18095 STATE OF INDIANA PROFESSIONAL ENGINEER	DETAILS PLACED IN THIS FORMAT 7-27-99
	/s/ Anthony L. Uremovich 7-27-99 — DESIGN STANDARDS ENGINEER — DATE
	/s/ Firooz Zandi 7-27-99 — CHIEF HIGHWAY ENGINEER — DATE
DESIGN STANDARDS ENGINEER	ORIGINALLY APPROVED 1-02-98