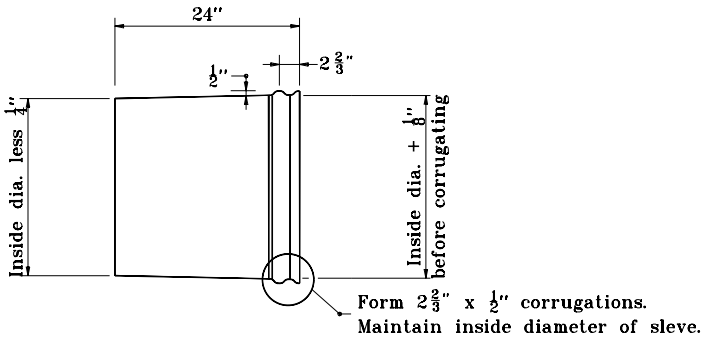

SMOOTH TAPERED SLEEVE DETAIL

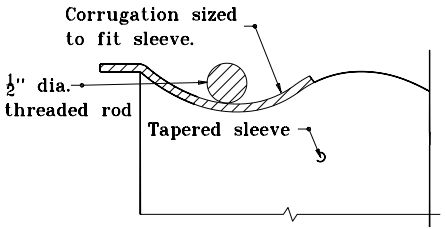

SECTION B–B

GENERAL NOTES

1. For circular pipe diameters through 24", attach end section to pipe with type 1 connector. For all other sizes, attach end section to pipe with type 2 connector.

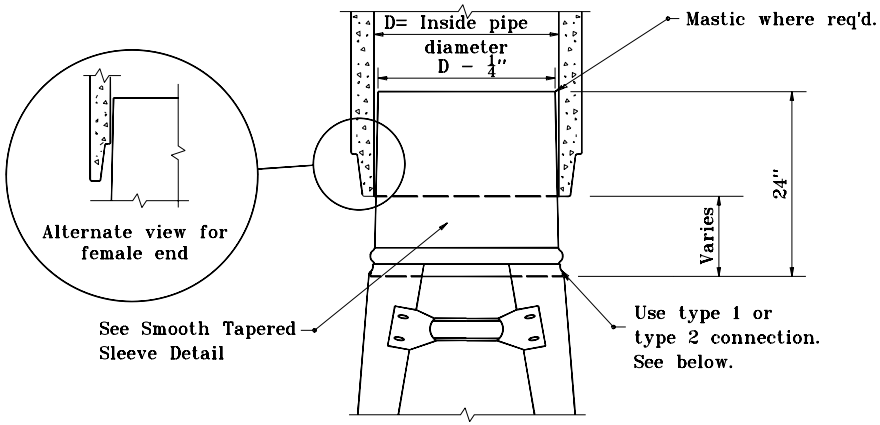

TAPERED SLEEVE FOR ATTACHING STEEL END SECTION TO SMOOTH INTERIOR PIPE

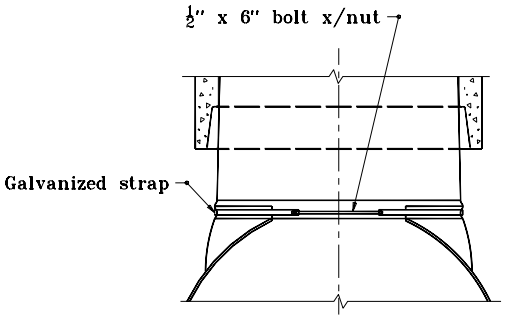

TYPE 1 CONNECTOR DETAIL

for all circular pipes through 24"

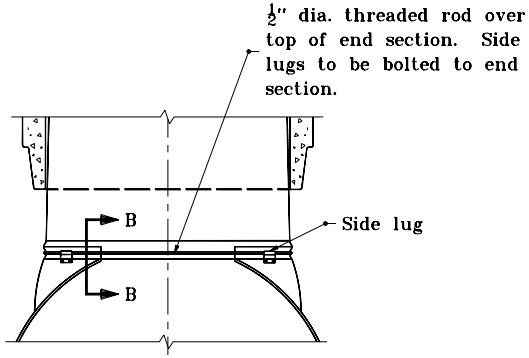

TYPE 2 CONNECTOR DETAIL

all circular pipes larger than 24" and all horizontal elliptical pipes

INDIANA DEPARTMENT OF TRANSPORTATION

SAFETY METAL CULVERT END SECTIONS FOR SMOOTH PIPE

JANUARY 1998

STANDARD DRAWING NO. **E 715-SMES-08**

ANTHONY L. UREMOVICH REGISTERED No. 18095 STATE OF INDIANA PROFESSIONAL ENGINEER

DESIGN STANDARDS ENGINEER

DETAILS PLACED IN THIS FORMAT	7-27-99
/s/ Anthony L. Uremovich DESIGN STANDARDS ENGINEER	7-27-99 DATE
/s/ Firooz Zandi CHIEF HIGHWAY ENGINEER	7-27-99 DATE
ORIGINALLY APPROVED	1-02-98