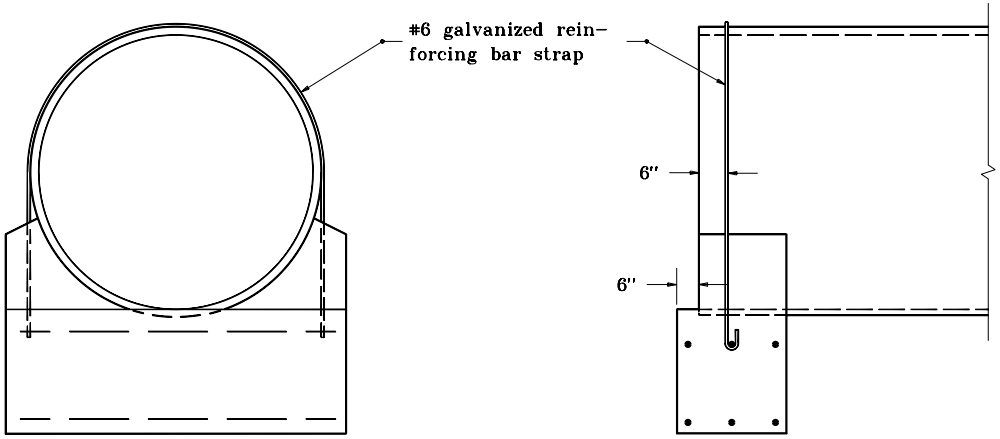

#6 REINFORCING BAR STRAP DETAILS

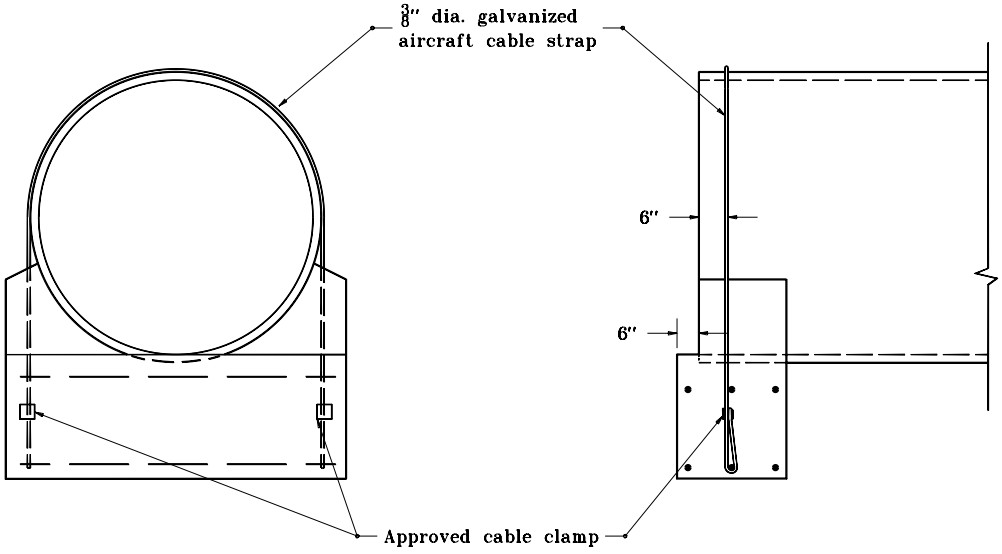

3/8" AIRCRAFT CABLE STRAP DETAILS

GENERAL NOTES

1. Anchor straps shall be used at both upstream and downstream ends of all C.A., C.S., and structural plate pipes and pipe arches with a diameter or span of 42" or greater.
2. Hook bolts and anchor straps shall be used at both upstream and downstream ends of all C.A., C.S., and structural plate pipes and pipe arches with a diameter or span of 84" or greater.
3. See Standard Drawing E 715-PAHB-01 for hook bolt details.
4. Riprap shall be placed at the ends of pipe structures when shown on the plans.

INDIANA DEPARTMENT OF TRANSPORTATION

PIPE ANCHOR STRAP DETAILS

JANUARY 1998

STANDARD DRAWING NO. **E 715-PASD-01**

ANTHONY L. UREMOVICH REGISTERED No. 18095 STATE OF INDIANA PROFESSIONAL ENGINEER

DESIGN STANDARDS ENGINEER

DETAILS PLACED IN THIS FORMAT 7-27-99

/s/ Anthony L. Uremovich 7-27-99
DESIGN STANDARDS ENGINEER DATE

/s/ Firooz Zandi 7-27-99
CHIEF HIGHWAY ENGINEER DATE

ORIGINALLY APPROVED 1-02-98