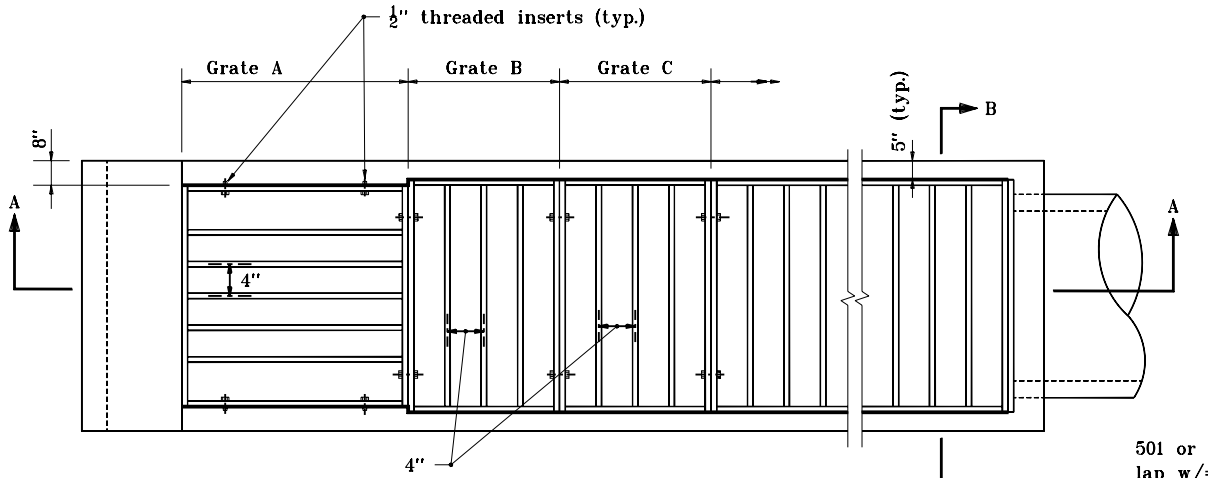

PLAN VIEW

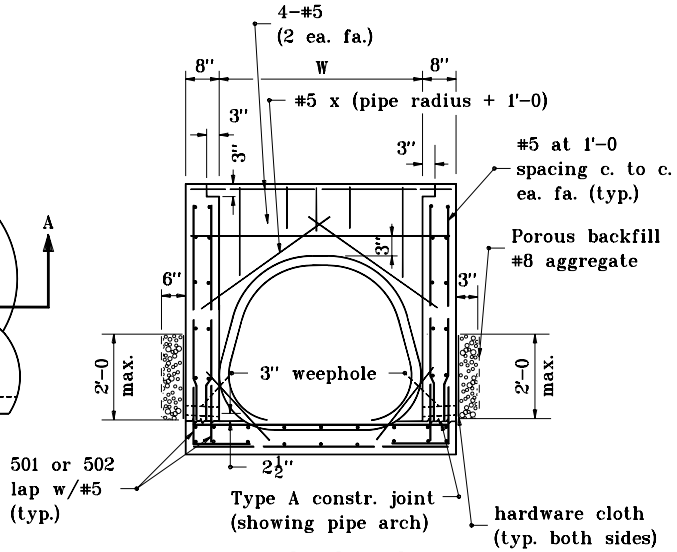

GRATE REMOVED

SECTION B-B

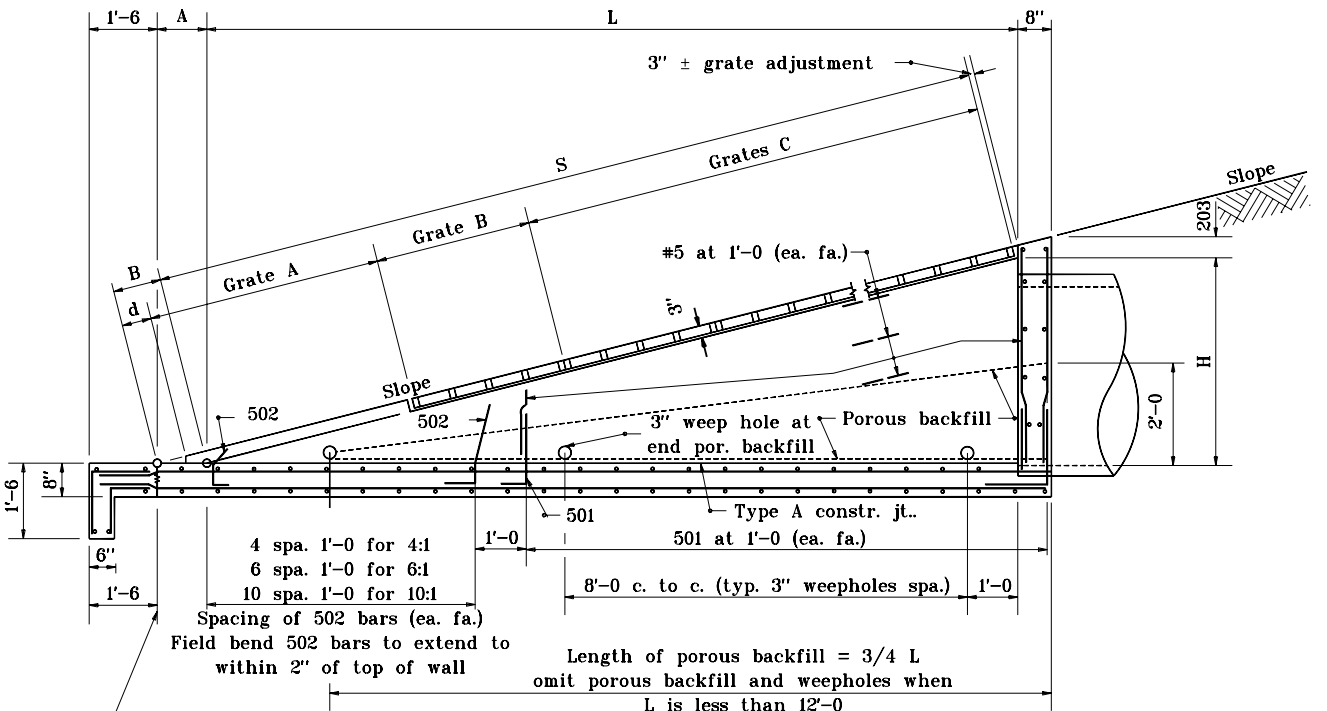

SECTION A-A

GENERAL NOTES

1. The invert grade of the grated box end section shall be the same as that of the pipe.
2. See Standard Drawings E 715-GBTT-05 and -06 for dimensions tables.
3. See Standard Drawing E 715-GBTT-02 for bending diagrams.
4. Type II grated box end sections shall be used for culverts parallel to the mainline within the clear zone.

INDIANA DEPARTMENT OF TRANSPORTATION

GRATED BOX END SECTION TYPE II

JANUARY 1999

STANDARD DRAWING NO. E 715-GBTT-03

ANTHONY L. UREMOVICH REGISTERED No. 18095 STATE OF INDIANA PROFESSIONAL ENGINEER

DESIGN STANDARDS ENGINEER

DETAILS PLACED IN THIS FORMAT	11-15-99
/s/ Anthony L. Uremovich DESIGN STANDARDS ENGINEER	11-15-99 DATE
/s/ Firooz Zandi CHIEF HIGHWAY ENGINEER	11-15-99 DATE
ORIGINALLY APPROVED	1-04-99