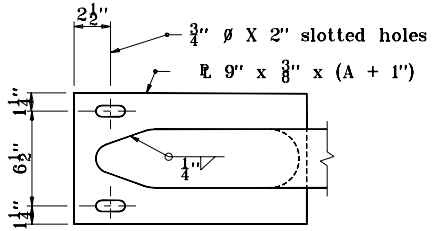

PLAN

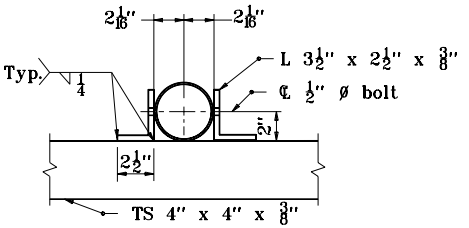

SECTION L-L

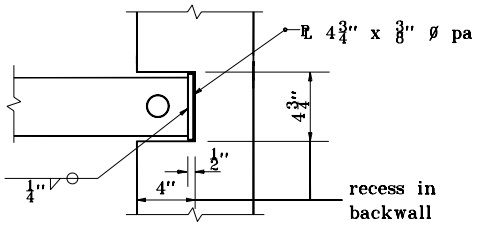

PLAN

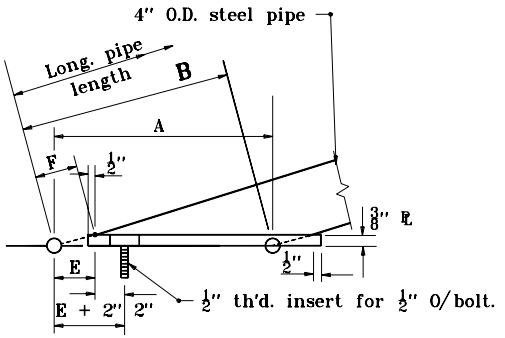

DETAIL A

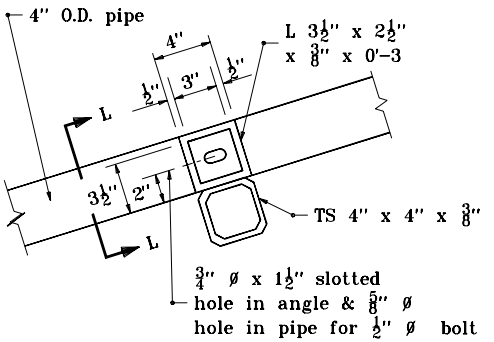

DETAIL B

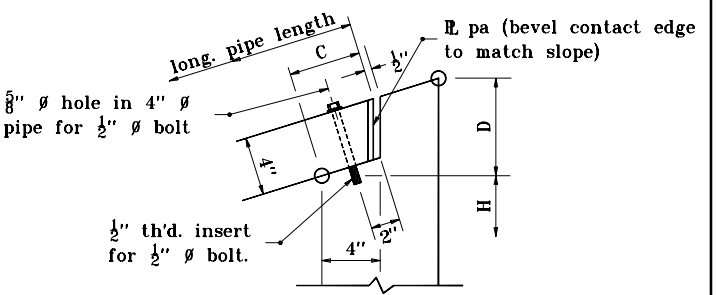

DETAIL C

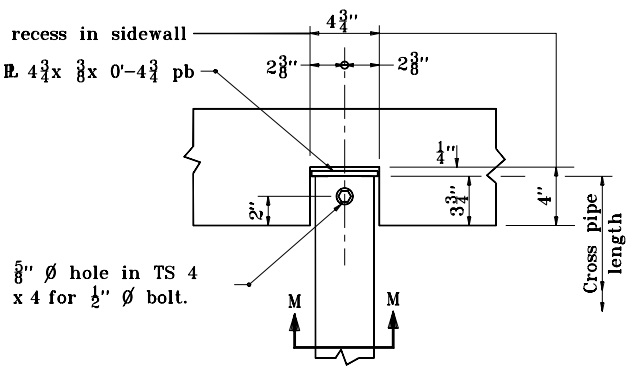

DETAIL D

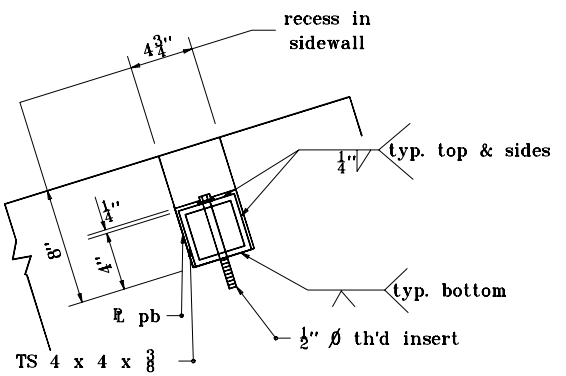

SECTION M-M

INDIANA DEPARTMENT OF TRANSPORTATION

GRATED BOX END SECTION TYPE I

JANUARY 1999

STANDARD DRAWING NO. E 715-GBTO-04

ANTHONY L. UREMOVICH REGISTERED No. 18095 STATE OF INDIANA PROFESSIONAL ENGINEER

DESIGN STANDARDS ENGINEER

DETAILS PLACED IN THIS FORMAT	11-15-99
/s/ Anthony L. Uremovich DESIGN STANDARDS ENGINEER	11-15-99 DATE
/s/ Firooz Zandi CHIEF HIGHWAY ENGINEER	11-15-99 DATE
ORIGINALLY APPROVED	1-04-99