NOTE

1. Refer to Standard Drawing E 715-BKFL-09 for general notes.

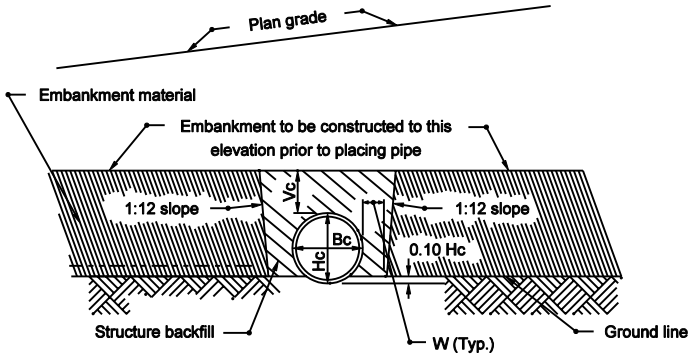

SECTION A-A

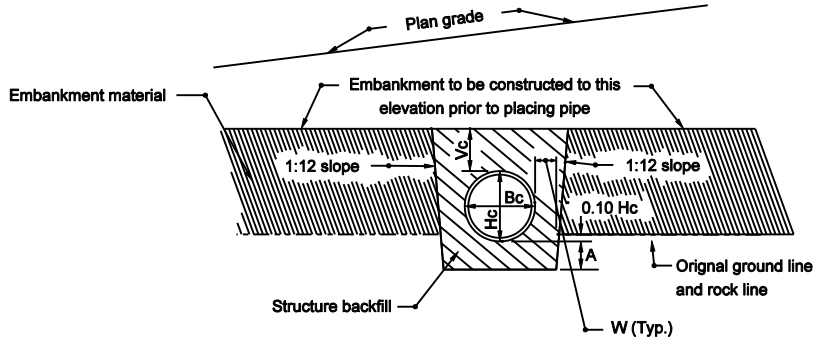

SECTION A-A
ROCK FOUNDATION

LEGEND

Hc = Overall diameter or rise
Bc = Overall diameter or span
A = 8" min. for fill height up to 16'
= 12" min. for fill height of 16' or more
Vc = 12" for Bc 18" ≤
= 18" for Bc 18" >
W = 0.3 Bc or 9", whichever is greater
⑦ E = Encasement

METHOD 1 BACKFILL

Structures under mainline pavement and public road approaches.

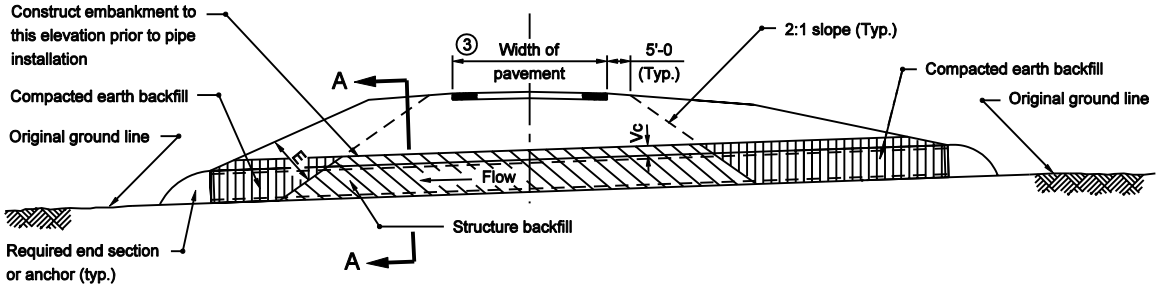

ELEVATION

INDIANA DEPARTMENT OF TRANSPORTATION

PIPE STRUCTURE BACKFILL EMBANKMENT INSTALLATIONS

MARCH 2003

STANDARD DRAWING NO. E 715-BKFL-01

ANTHONY L. UREMOVICH REGISTERED No. 18095 STATE OF INDIANA PROFESSIONAL ENGINEER
DESIGN STANDARDS ENGINEER

/s/ Anthony L. Uremovich 3-03-03
DESIGN STANDARDS ENGINEER DATE

/s/ Richard K. Smutzer 3-03-03
CHIEF HIGHWAY ENGINEER DATE