Top and sides of structure

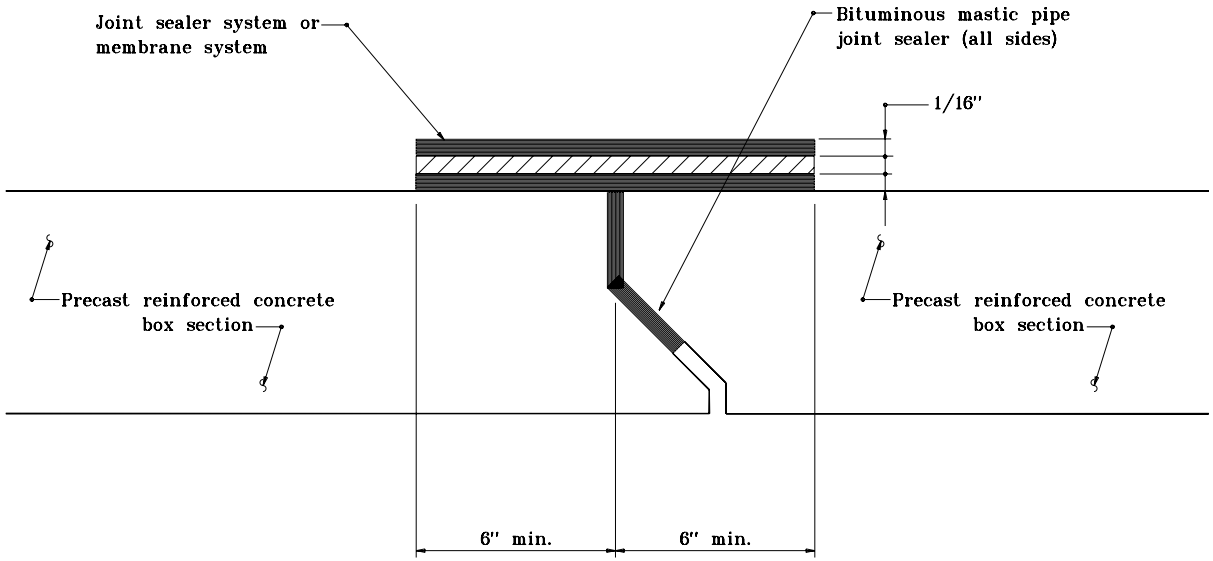

Inside of structure

INDIANA DEPARTMENT OF TRANSPORTATION

PRECAST REINFORCED CONCRETE BOX SECTION JOINT

MAY 1999

STANDARD DRAWING NO. **E 714-BCJT-01**

ANTHONY L. UREMOVICH REGISTERED No. 18095 STATE OF INDIANA PROFESSIONAL ENGINEER

DESIGN STANDARDS ENGINEER

/s/ Anthony L. Uremovich 5-03-99
DESIGN STANDARDS ENGINEER DATE

/s/ Donald Lucas 5-03-99
CHIEF HIGHWAY ENGINEER DATE

Source Sheet: NONE