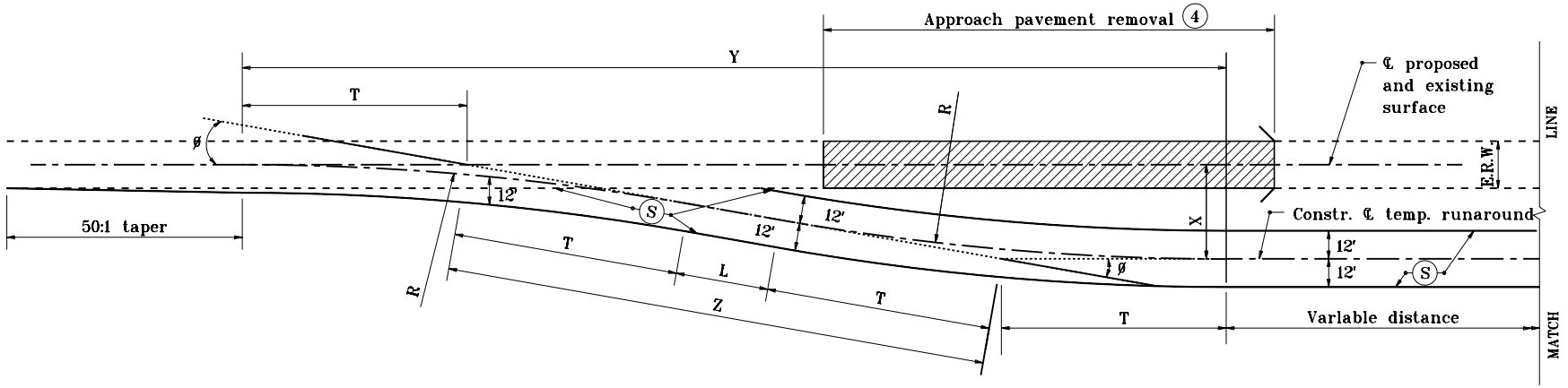

TEMPORARY RUNAROUND

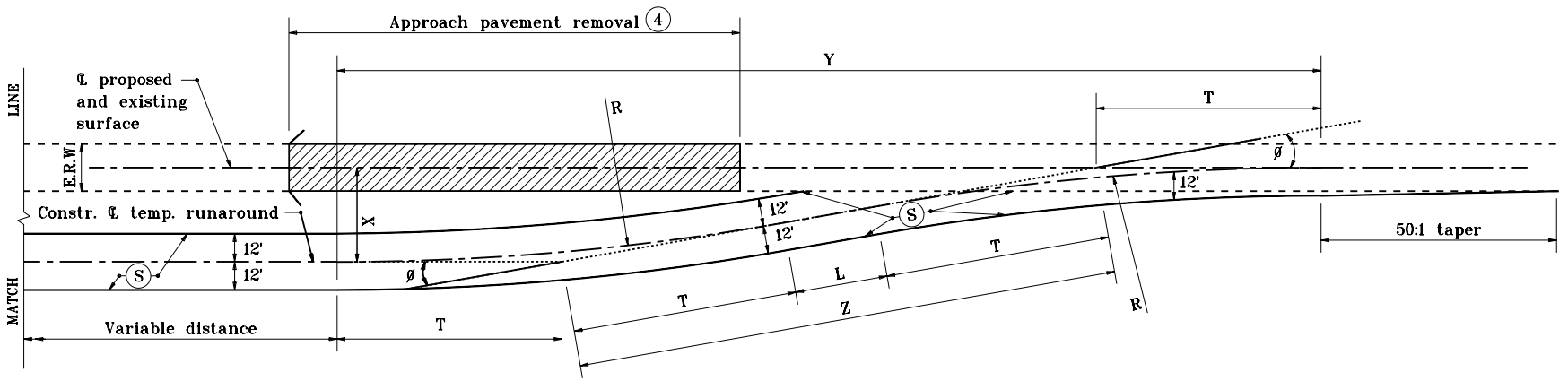

TEMPORARY RUNAROUND

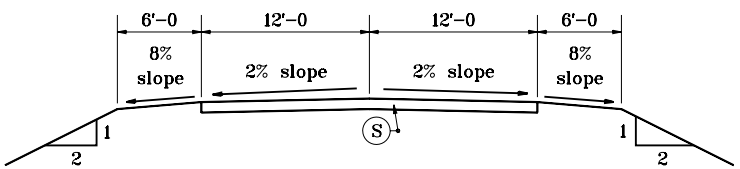

TYPICAL RUNAROUND SECTION

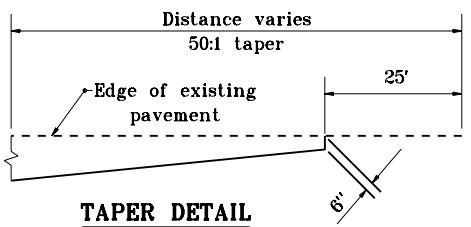

TAPER DETAIL

General Notes:

1. For notes that apply to this sheet, see Standard Drawing E 713-TCTR-04.
2. See Standard Drawing E 713-TCTR-02 for runaround geometrics and surface quantities.
3. See Standard Drawing E 801-TCLG-01 for standard notes and legend.

INDIANA DEPARTMENT OF TRANSPORTATION

TEMPORARY RUNAROUND GEOMETRICS

NOVEMBER 1995

STANDARD DRAWING NO. **E 713-TCTR-01**

ANTHONY L. UREMOVICH REGISTERED No. 18095 STATE OF INDIANA PROFESSIONAL ENGINEER

DESIGN STANDARDS ENGINEER

DETAILS PLACED IN THIS FORMAT	11-15-99
/s/ Anthony L. Uremovich DESIGN STANDARDS ENGINEER	11-15-99 DATE
/s/ Firooz Zandi CHIEF HIGHWAY ENGINEER	11-15-99 DATE
ORIGINALLY APPROVED	11-01-95