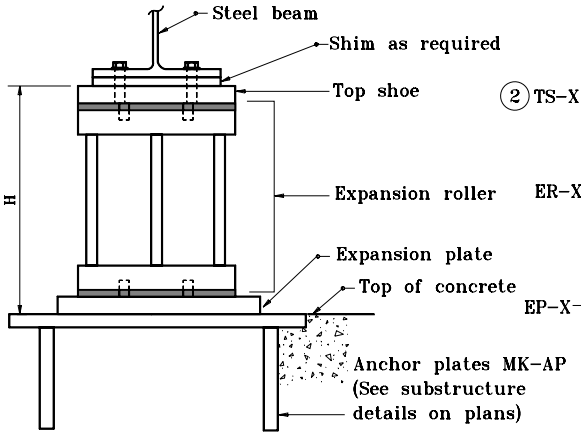

EXPANSION SHOE ASSEMBLY

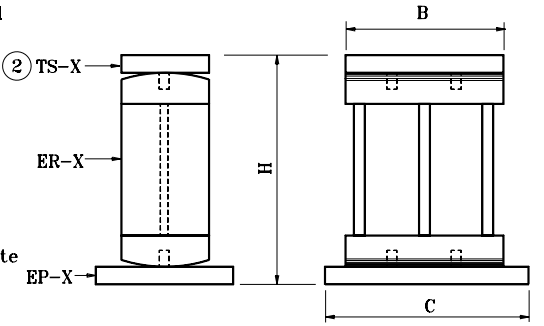

EXPANSION SHOE

TABLE OF SHOE ASSEMBLY

Shoe Type	Maximum Reaction	Shoe Assembly			H
		TS-X	ER-X	EP-X	
E-1	95 k	TS-1	ER-1	EP-1	1'-6½"
E-2	154 k	TS-2	ER-2	EP-2	1'-7
E-3	240 k	TS-3	ER-3	EP-3	1'-3¾"
E-4	137 k	TS-4	ER-4	EP-4	1'-6½"
E-5	200 k	TS-5	ER-5	EP-5	1'-7
E-6	300 k	TS-6	ER-6	EP-6	1'-3¾"

NOTES :

1. Curved surfaces of shoes to be machined after weldments have been completed. At the contractor's option the following substitutions of materials will be allowed at no increase in unit price of material.

a). A-709 Grade 50W steel may be used in lieu of A-709 Grade 36 steel.

b). A-709 Grade 100 steel may be used in lieu of A-709 Grade 50W or A-709 Grade 36 steels.

2 Top shoe TS-X details are shown on Standard Drawing E 711-BSTS-01.

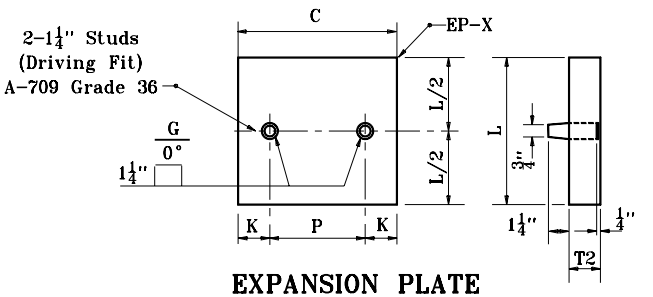

EXPANSION PLATE

EP-X	C	L	T2	K	P	Section	Material
EP-1	1'-4	9"	1¾"	4¼"	7½"	PL 9 x 1¾"	A-709 Grade 36
EP-2	1'-4	10"	2"	4½"	7	PL 10 x 2	A-709 Grade 50W
EP-3	1'-4	1'-3	1⅞"	4¾"	6½"	PL 15 x 2	A-709 Grade 100
EP-4	1'-8	9"	1¾"	5"	10	PL 9 x 1¾"	A-709 Grade 36
EP-5	1'-8	10"	2"	5¼"	9½"	PL 10 x 2	A-709 Grade 50W
EP-6	1'-8	1'-3	1⅞"	5½"	9	PL 15 x 2	A-709 Grade 100

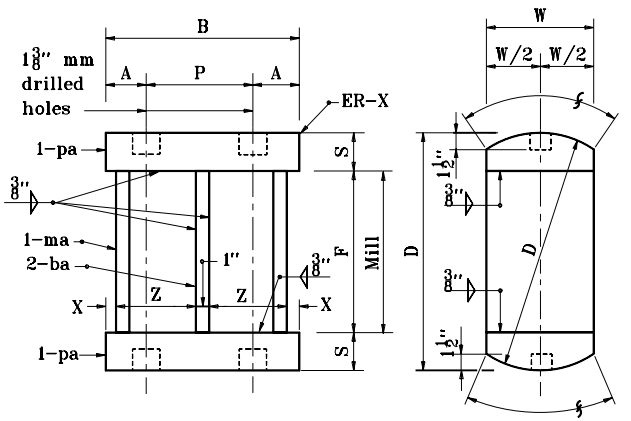

EXPANSION ROLLER

ER-X	B	W	D	S	F	A	P	X	Z	Sections			Note
										ma	ba	pa	
ER-1	1'-0	8	1'-3	2⅜"	10¼"	2¼"	7½"	9/16"	4 15/16"	W 10 x 88	BAR 3½ x 1	PL 8 x 2½"	A-709 Grade 36
ER-2	1'-0	8	1'-3	2⅜"	10¼"	2½"	7"	9/16"	4 15/16"	W 10 x 88	BAR 3½ x 1	PL 8 x 2½"	A-709 Grade 50W
ER-3	1'-0	6	1'-0	1⅞"	8¼"	2¾"	6½"	9/16"	4 15/16"	W 10 x 88	BAR 2½ x 1	PL 6 x 2	A-709 Grade 100
ER-4	1'-4	8	1'-3	2⅜"	10¼"	3"	10"	11/16"	6 13/16"	W 14 x 132	BAR 3½ x 1	PL 8 x 2½"	A-709 Grade 36
ER-5	1'-4	8	1'-3	2⅜"	10¼"	3¼"	9½"	11/16"	6 13/16"	W 14 x 132	BAR 3½ x 1	PL 8 x 2½"	A-709 Grade 50W
ER-6	1'-4	6	1'-0	1⅞"	8¼"	3½"	9"	11/16"	6 13/16"	W 14 x 132	BAR 2½ x 1	PL 6 x 2	A-709 Grade 100

INDIANA DEPARTMENT OF TRANSPORTATION

EXPANSION STEEL SHOE DETAILS

JANUARY 2001

STANDARD DRAWING NO. E 711-BSTS-02

ANTHONY L. UREMOVICH REGISTERED No. 18095 STATE OF INDIANA PROFESSIONAL ENGINEER

DESIGN STANDARDS ENGINEER

/s/ Anthony L. Uremovich 1-02-01
DESIGN STANDARDS ENGINEER DATE

/s/ Firooz Zandi 1-02-01
CHIEF HIGHWAY ENGINEER DATE