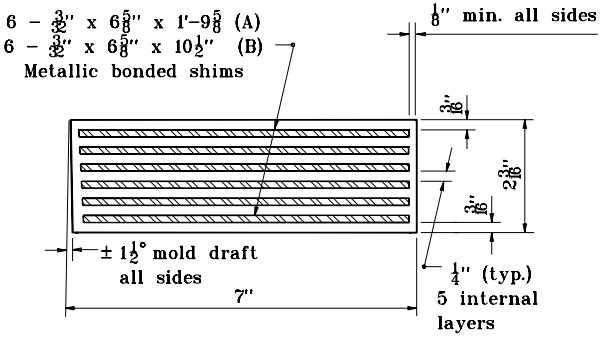

SECTION E–E

TYPE 5

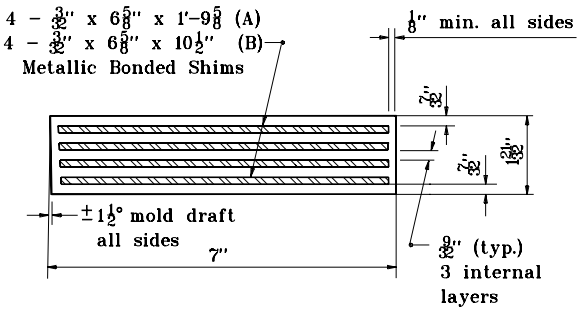

SECTION E–E

TYPE 6

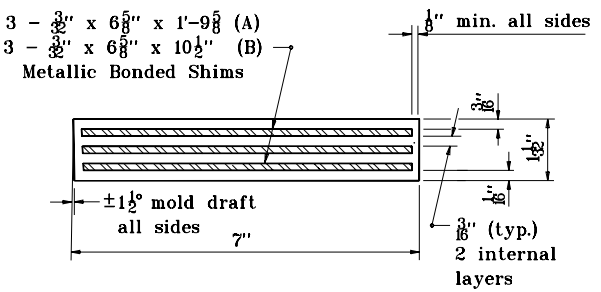

SECTION E–E

TYPE 7

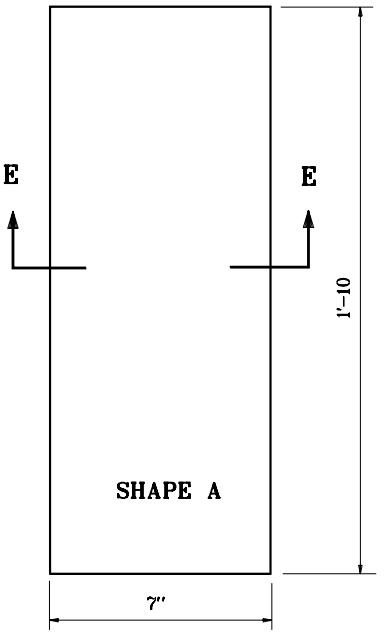

TYPE 5A, 6A, & 7A

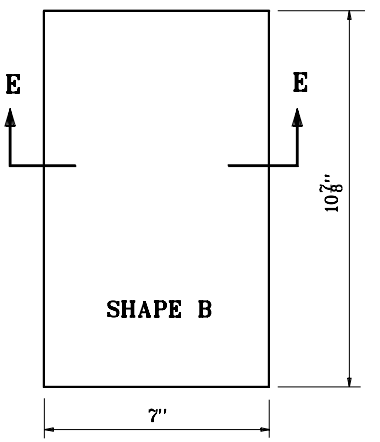

TYPE 5B, 6B, & 7B

NOTES :

1. Material: 55 (±5) durometer elastomer. Pads Type 5, 6, & 7 (shapes A & B) are to be used with prestressed box beams. Select type by suitable design. Use shape A under adjacent box beams and shape B under outside edge of exterior box beam. Pads to be designated as Type 5A, 5B, etc.

2. The proper pad type to be used with spread box beams shall be determined by design.

INDIANA DEPARTMENT OF TRANSPORTATION

ELASTOMERIC BEARING PADS
TYPE 5, 6 & 7
JANUARY 1995

STANDARD DRAWING NO. **E 707–BEBP–03**

ANTHONY L. UREMOVICH REGISTERED No. 18095 STATE OF INDIANA PROFESSIONAL ENGINEER

DESIGN STANDARDS ENGINEER

DETAILS PLACED IN THIS FORMAT	11-15-99
/s/ Anthony L. Uremovich DESIGN STANDARDS ENGINEER	11-15-99 DATE
/s/ Firooz Zandi CHIEF HIGHWAY ENGINEER	11-15-99 DATE
ORIGINALLY APPROVED	1-03-95