NOTES

1. All reinforcing bars designated "E" shall be epoxy coated.
2. See Standard Drawing E706-CBRT-02 for attachment of Guardrail Transition Type TGB.

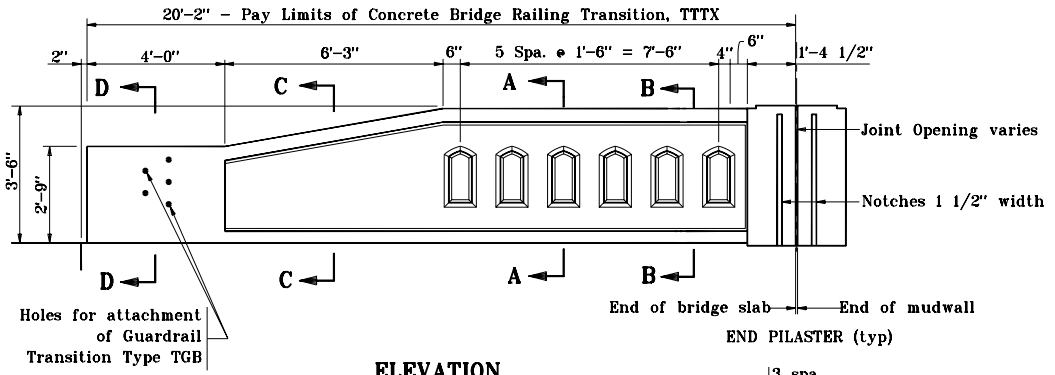

ELEVATION

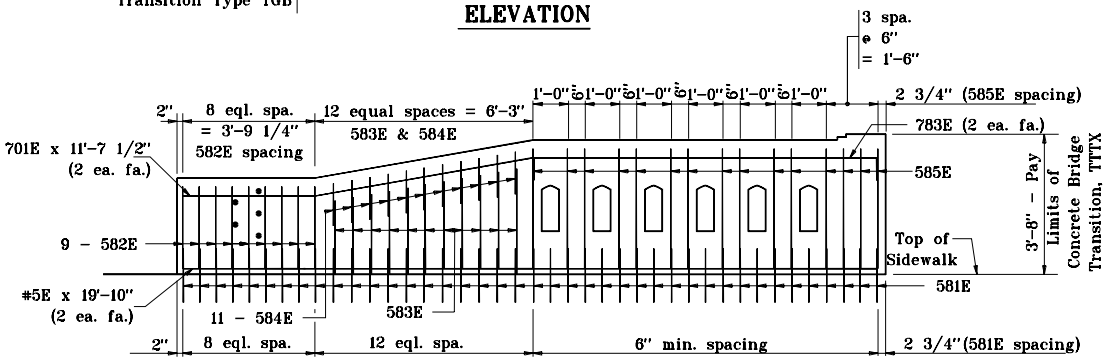

ELEVATION SHOWING REINFORCING STEEL

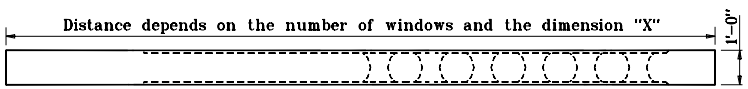

PLAN

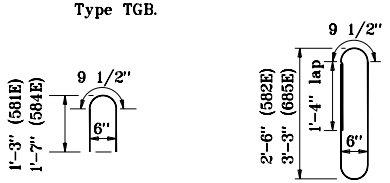

581E x 2'-9"
584E x 3'-5"

582E x 6'-11"
585E x 8'-5"

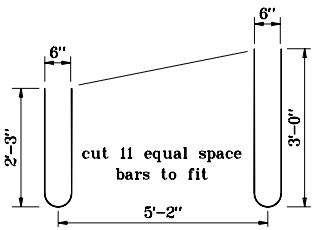

583E

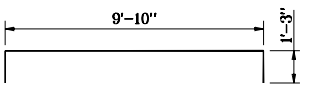

783E x 12'-4"

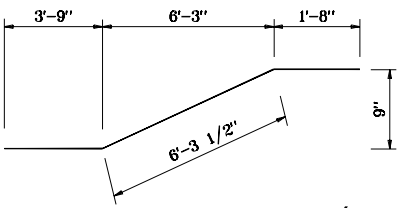

701E x 11'-71/2"

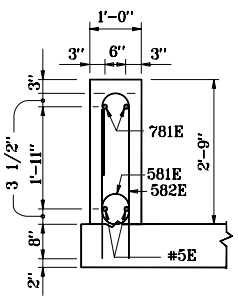

SECTION D-D

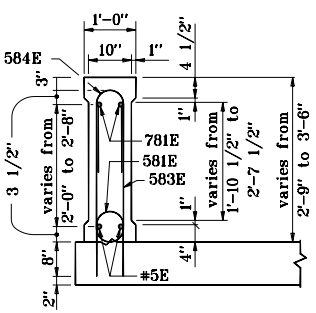

SECTION C-C

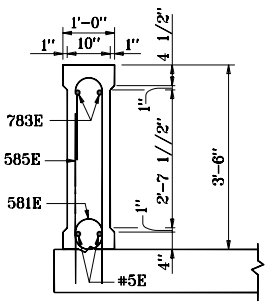

SECTION B-B

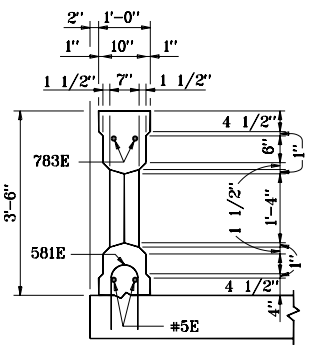

SECTION A-A

INDIANA DEPARTMENT OF TRANSPORTATION

CONCRETE BRIDGE RAILING TRANSITION, TTTX

MAY 2000

STANDARD DRAWING NO. E 706-TTTX-01

ANTHONY L. UREMOVICH REGISTERED No. 18095 STATE OF INDIANA PROFESSIONAL ENGINEER

/s/ Anthony L. Uremovich 5-01-00
DESIGN STANDARDS ENGINEER DATE

/s/ Firooz Zandi 5-01-00
CHIEF HIGHWAY ENGINEER DATE

DESIGN STANDARDS ENGINEER