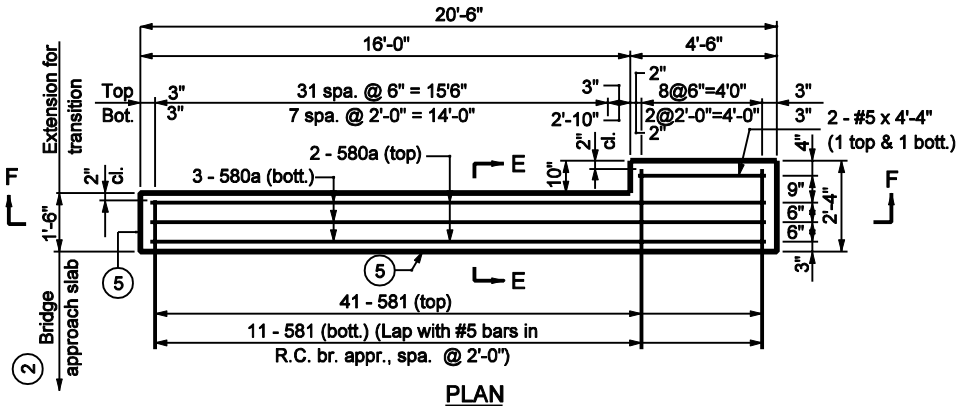

PLAN

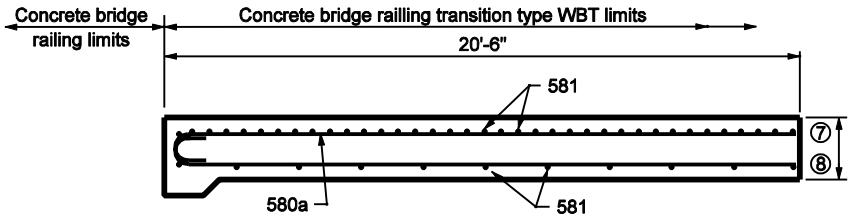

SECTION F-F

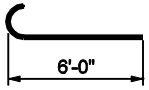

581 x 6'-7"

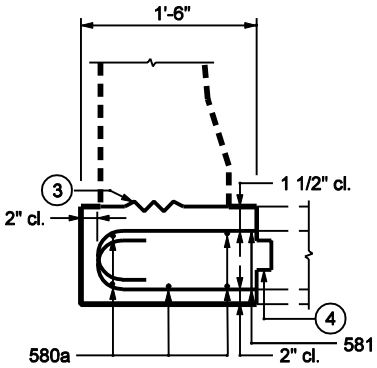

SECTION E-E

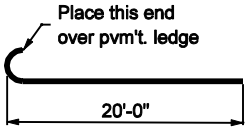

580a x 20'-7"

NOTES:

1. See Standard Drawing E-706-TASE-05 for General Notes.

BILL OF MATERIALS			
These quantities are for one approach slab extension.			
EPOXY COATED REINFORCING STEEL			
Size & type	No. of Bars	Length	Weight (lb)
580a	5	20'-7"	
581	52	6'-7"	
#5	2	4'-4"	
Total #5 Bars			476
Total Epoxy Coated Steel			476
MISCELLANEOUS			
10" R.C. Pvmt.			3.7 yd^2

INDIANA DEPARTMENT OF TRANSPORTATION

BRIDGE RAILING TRANSITION WBT SLAB EXTENSION

SEPTEMBER 2002

STANDARD DRAWING NO. E 706-TASE-04

RICHARD L. VanCLEAVE REGISTERED No. 9750 STATE OF INDIANA PROFESSIONAL ENGINEER

DESIGN STANDARDS ENGINEER

/s/ Richard L. VanCleave 9-03-02
DESIGN STANDARDS ENGINEER DATE

/s/ Richard K. Smulzer 9-03-02
CHIEF HIGHWAY ENGINEER DATE