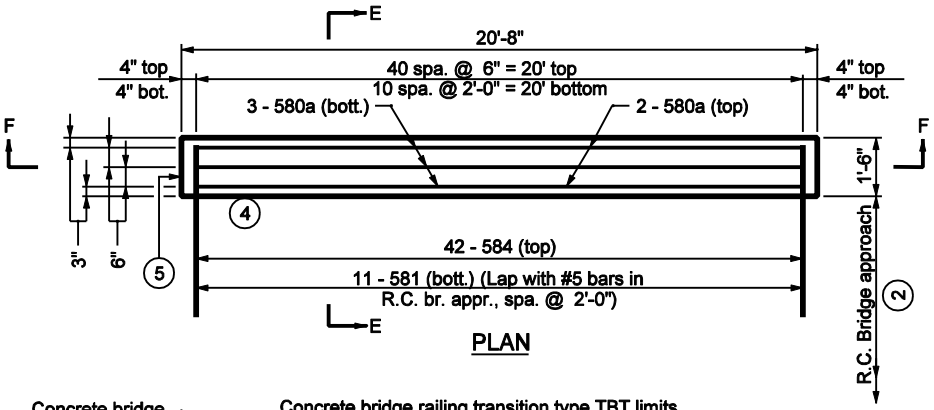

PLAN

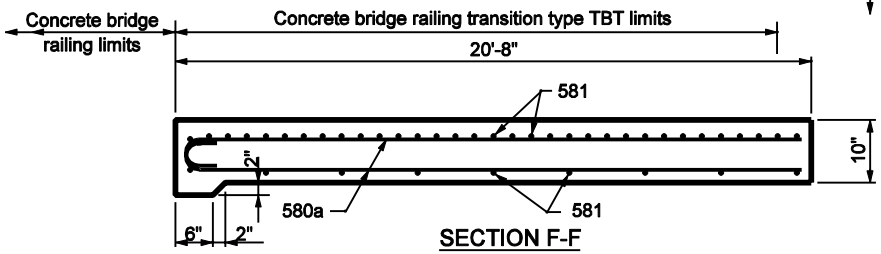

SECTION F-F

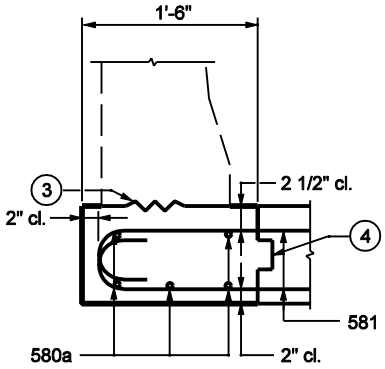

SECTION E-E

BILL OF MATERIALS			
These quantities are for one side Approach Slab Extension.			
EPOXY COATED REINFORCING STEEL			
Size & Mark	No. of Bars	Length (ft.)	Weight (lb)
580a	5	21'-1"	
581	52	6'-7"	
Total #5 Bars			467
Total Epoxy Coated Steel			467
MISCELLANEOUS			
R.C. Br. Appr., 10"			3.0 yd^2

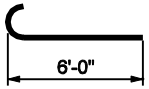

581 x 6'-7"

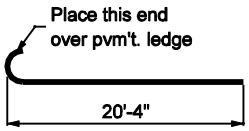

580a x 21'-1"

APPROACH SLAB EXTENSION DETAILS

NOTES:

1. See Standard Drawing E 706-TTBT-01 through -03 for concrete bridge railing transition type TBT details.
2. See Standard Drawing E 706-TASE-05 for General Notes.

INDIANA DEPARTMENT OF TRANSPORTATION

BRIDGE RAILING TRANSITION
TBT SLAB EXTENSION

SEPTEMBER 2002

STANDARD DRAWING NO. E 706-TASE-02

RICHARD L. VanCLEAVE REGISTERED No. 9750 STATE OF INDIANA PROFESSIONAL ENGINEER

DESIGN STANDARDS ENGINEER

/s/ Richard L. VanCleave 9-03-02
DESIGN STANDARDS ENGINEER DATE

/s/ Richard K. Smulzer 9-03-02
CHIEF HIGHWAY ENGINEER DATE