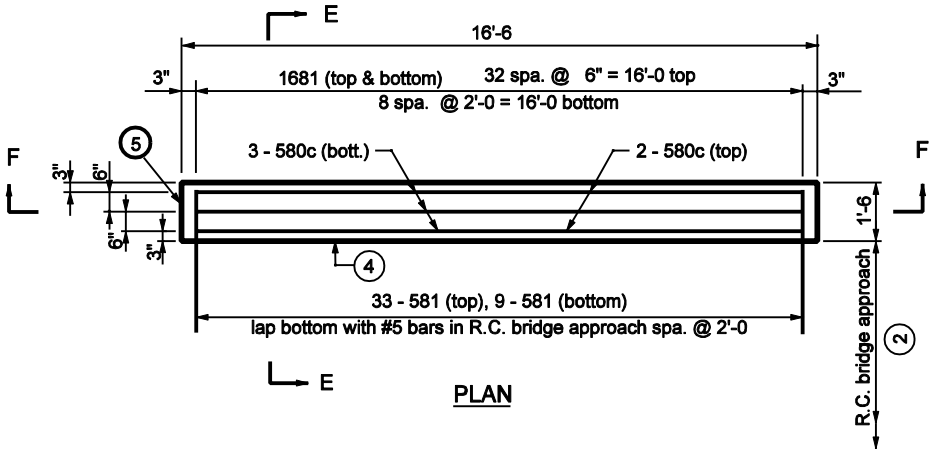

PLAN

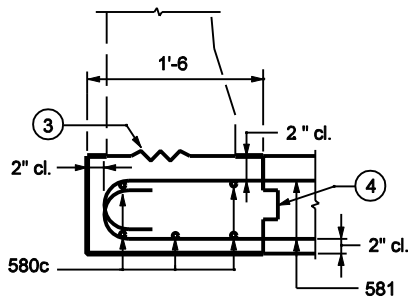

SECTION E-E

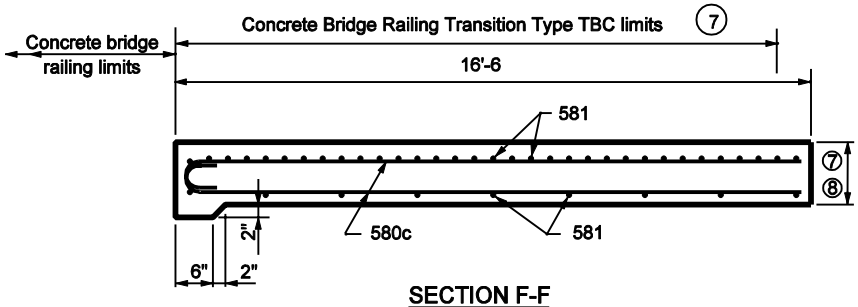

SECTION F-F

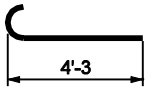

581 x 4'-10

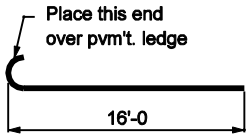

580c x 16'-7

BILL OF MATERIALS			
These quantities are for one side Approach Slab Extension.			
EPOXY COATED REINFORCING STEEL			
Size & Mark	No. of Bars	Length (ft-in)	Weight (lb)
580c	5	16'-7	
581	42	4'-10	
Total #5 bars			298
Total Epoxy Coated Steel			298
MISCELLANEOUS			
R.C. Br. Appr., 10"			2.8 yd ^{2}

NOTES :

1. See Standard Drawings E 706-TTBC-01 through -03 for concrete bridge railing transition type TBC details.

2. See Standard Drawing E 706-TASE-05 for General Notes.

INDIANA DEPARTMENT OF TRANSPORTATION

BRIDGE RAILING TRANSITION
TBC SLAB EXTENSION

SEPTEMBER 2002

STANDARD DRAWING NO. E 706-TASE-01

RICHARD L. VanCLEAVE REGISTERED No. 9750 STATE OF INDIANA PROFESSIONAL ENGINEER

DESIGN STANDARDS ENGINEER

/s/ Richard L. VanCleave 9-03-02
DESIGN STANDARDS ENGINEER DATE

/s/ Richard K. Smulzer 9-03-02
CHIEF HIGHWAY ENGINEER DATE