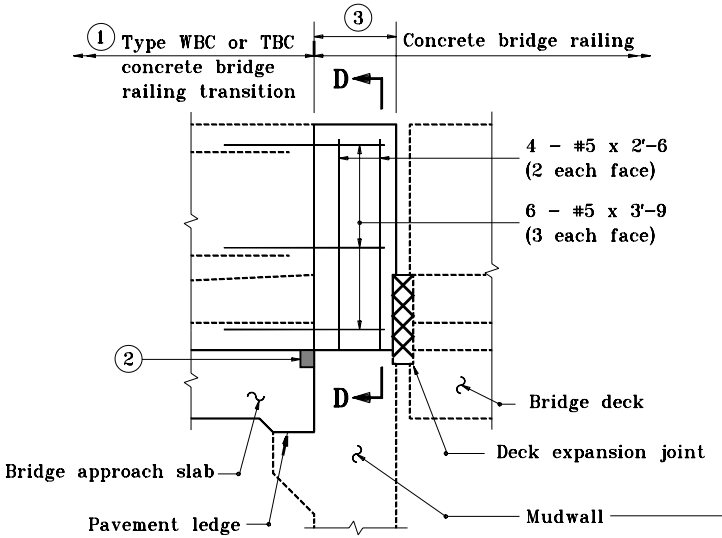

PART ELEVATION

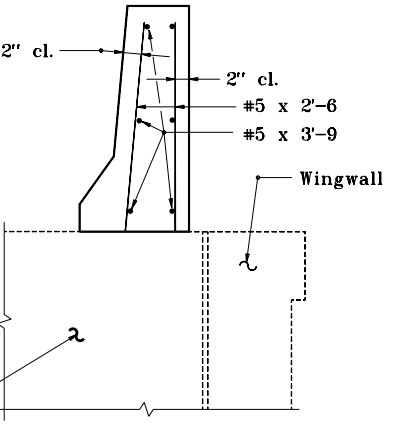

SECTION D-D

DETAILS AT DECK EXPANSION JOINT

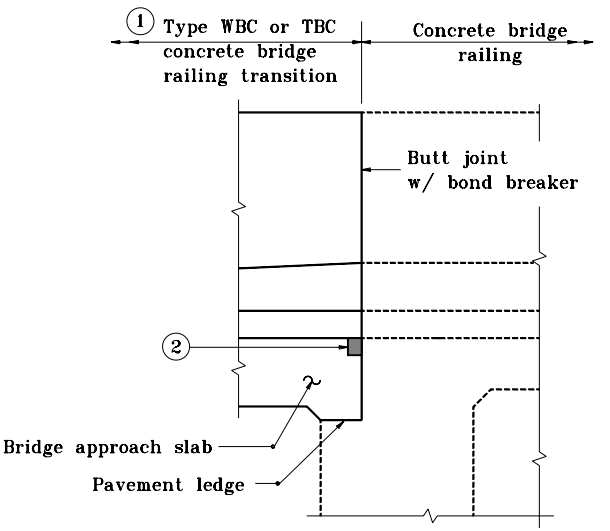

DETAIL AT INTEGRAL END BENT

NOTES :

1. See Standard Drawings E 706-TWBC-01 through -03 for concrete bridge railing transition type WBC details. See Standard Drawings E 706-TTBC-01 & -02 for concrete bridge railing transition type TBC details.

2. See Standard Drawing E 724-BJTS-01 for type IA joint details.

3. This section of railing is part of the concrete bridge railing and shall be billed with the concrete railing on the bridge. The minimum length of this section shall be equal to the thickness of the mudwall, but the actual length of this section will depend on the position of the concrete bridge railing transition type WBC or TBC along the bridge approach slab, and shall be as shown on the plans. See Standard Drawing E 706-BCBR-01 for concrete bridge railing dimensions.

INDIANA DEPARTMENT OF TRANSPORTATION

BRIDGE RAILING TRANSITION WBC DETAILS AT END BENT

MAY 2000

STANDARD DRAWING NO. **E 706-CBRT-01**

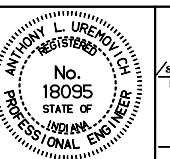

DESIGN STANDARDS ENGINEER

/s/ Anthony L. Uremovich — DESIGN STANDARDS ENGINEER — 5-01-00 DATE

/s/ Firooz Zandi — CHIEF HIGHWAY ENGINEER — 5-01-00 DATE