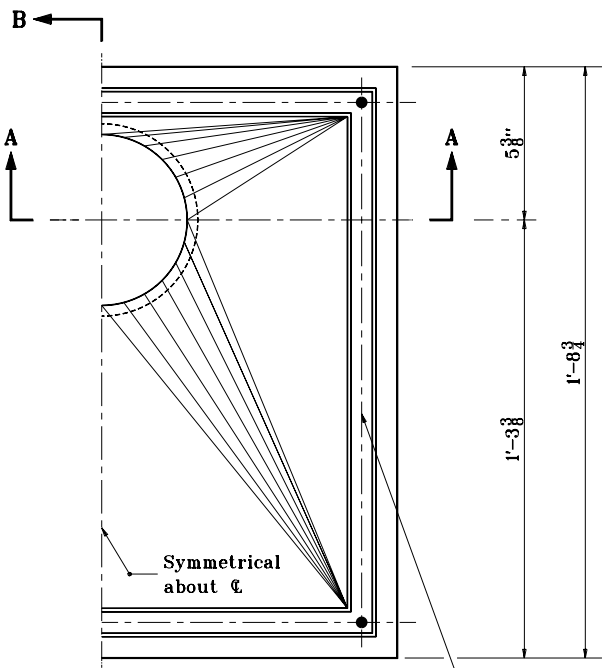

HALF PLAN

Tapped holes for 5/8" screws

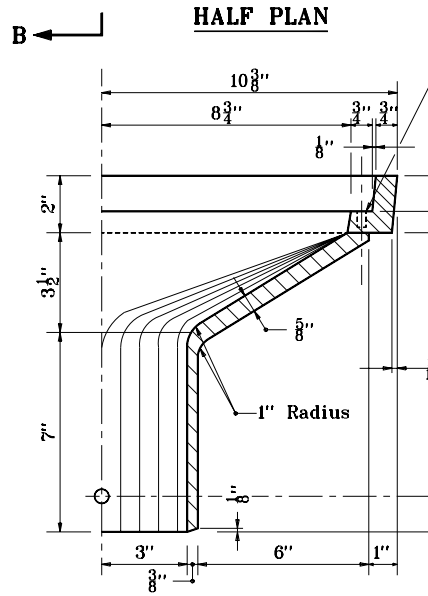

HALF SECTION A-A

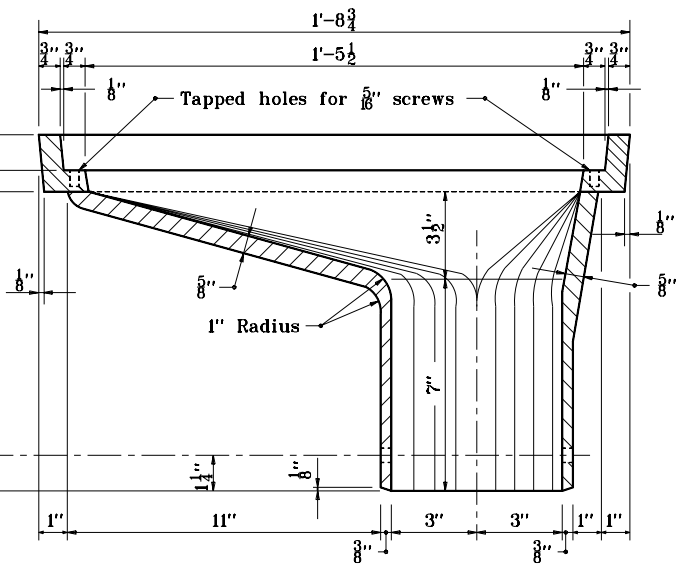

SECTION B-B

GENERAL NOTES

1. For attaching pipe to all drains, use 3/8"x1 1/2" hex bolts with 2-3/8" lock washers and 2-3/8" nuts. (All parts galvanized)

2. The approximate weight of the drain is 120 lb..

INDIANA DEPARTMENT OF TRANSPORTATION

CASTING DETAILS
ROADWAY DRAIN TYPE SQ
SEPTEMBER 1994

STANDARD DRAWING NO. **E 704-BDCG-04**

ANTHONY L. UREMOVICH REGISTERED No. 18095 STATE OF INDIANA PROFESSIONAL ENGINEER

DESIGN STANDARDS ENGINEER

DETAILS PLACED IN THIS FORMAT	11-15-99
/s/ Anthony L. Uremovich DESIGN STANDARDS ENGINEER	11-15-99 DATE
/s/ Firooz Zandi CHIEF HIGHWAY ENGINEER	11-15-99 DATE
ORIGINALLY APPROVED	9-30-94