PROCEDURE FOR SPLICING PARTIALLY DRIVEN PILING

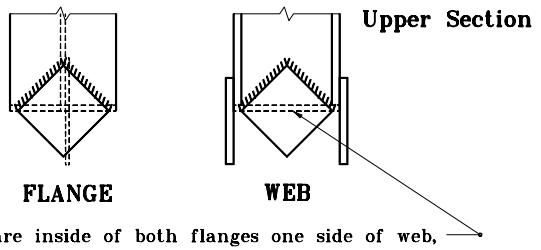

Prepare inside of both flanges one side of web, and weld on splice plates.

a.) Hold upper section in place with pile line, then plumb pile.

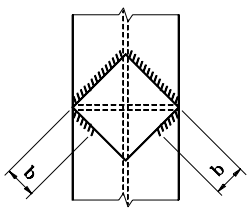

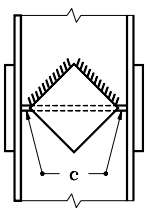

b.) Weld fillet for b = 2" on each outside corner of flange plates.

c.) Weld prepared butt joint for c = $1\frac{1}{2}$" at each end of the web.

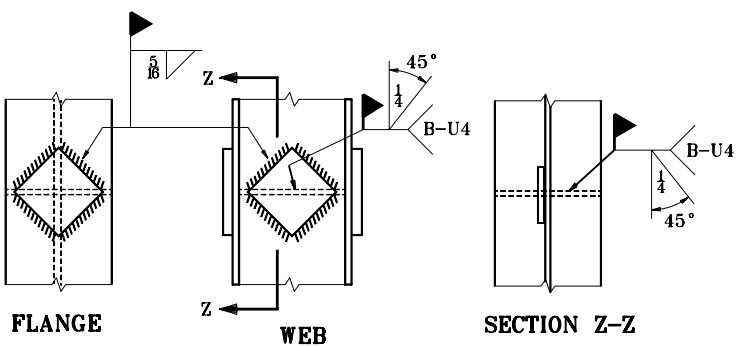

COMPLETED SPLICE

d.) Remove pile line and complete all welds.

NOTES :

1. PROCEDURE FOR SPLICING PILING BEFORE DRIVING

   Steel H piling may be spliced in a horizontal position prior to driving using splice plates and web and flange penetration welds as shown below. The welding sequence need not be followed provided the piling remains straight after welding.

2. Use $\frac{3}{8}$ in. thick square plates and $\frac{5}{16}$ in. fillet welds.

SPLICE PLATE DIMENSIONS & PLACEMENT

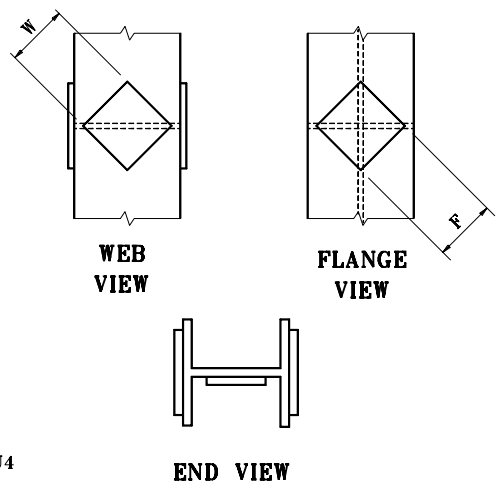

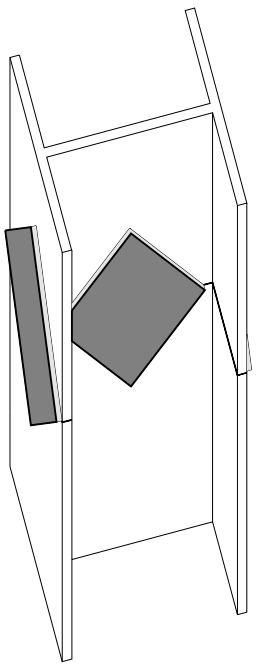

COMPLETED SPLICE ISOMETRIC

SPLACE PLATE DIMENSIONS

H-PILE SIZE	HP 10	HP 12	HP 14
FLANGE - F	7"	$8\frac{1}{4}$"	$10\frac{1}{4}$"
WEB - W	$5\frac{1}{2}$"	$6\frac{3}{4}$"	8"

INDIANA DEPARTMENT OF TRANSPORTATION

STEEL H-PILE SPLICE PROCEDURE

MAY 1998

STANDARD DRAWING NO. **E 701-BPIL-05**

ANTHONY L. UREMOVICH REGISTERED No. 18095 STATE OF INDIANA PROFESSIONAL ENGINEER

DESIGN STANDARDS ENGINEER

DETAILS PLACED IN THIS FORMAT	11-15-99
/s/ Anthony L. Uremovich DESIGN STANDARDS ENGINEER	11-15-99 DATE
/s/ Firooz Zandi CHIEF HIGHWAY ENGINEER	11-15-99 DATE
ORIGINALLY APPROVED	5-01-98