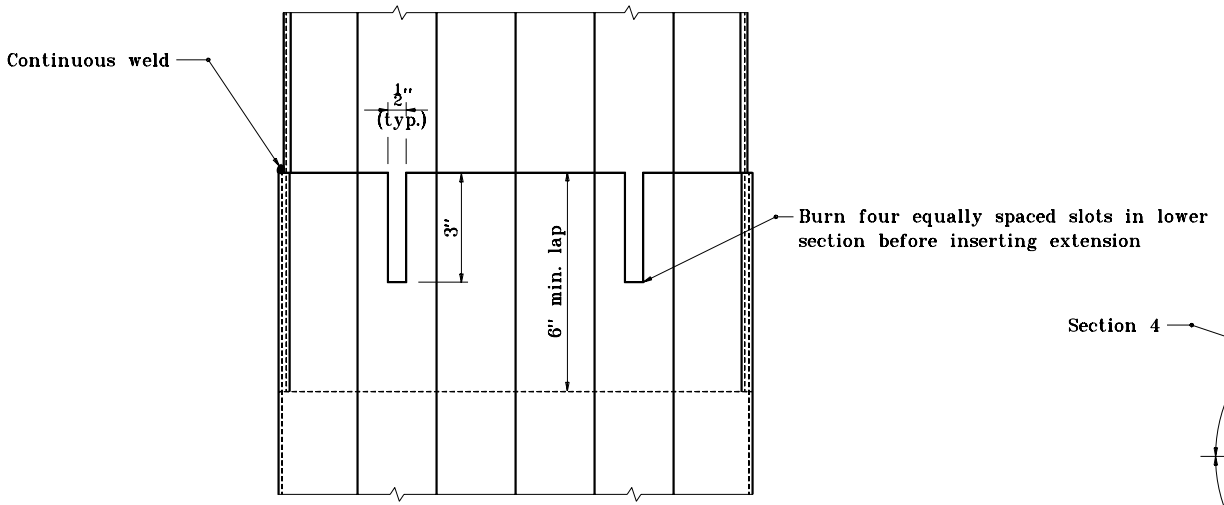

FOR FLUTED SHELLS

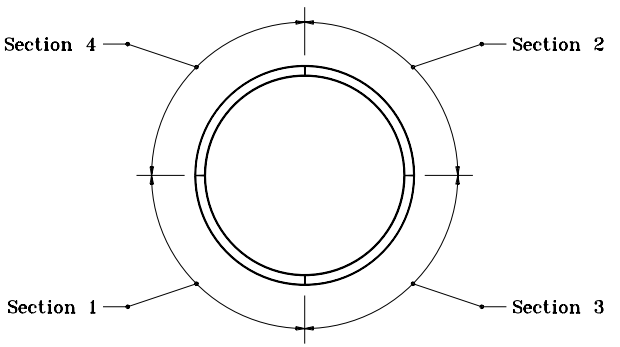

Completion of Sections 1, 2, 3 & 4 constitutes one pass.

WELDING SEQUENCE

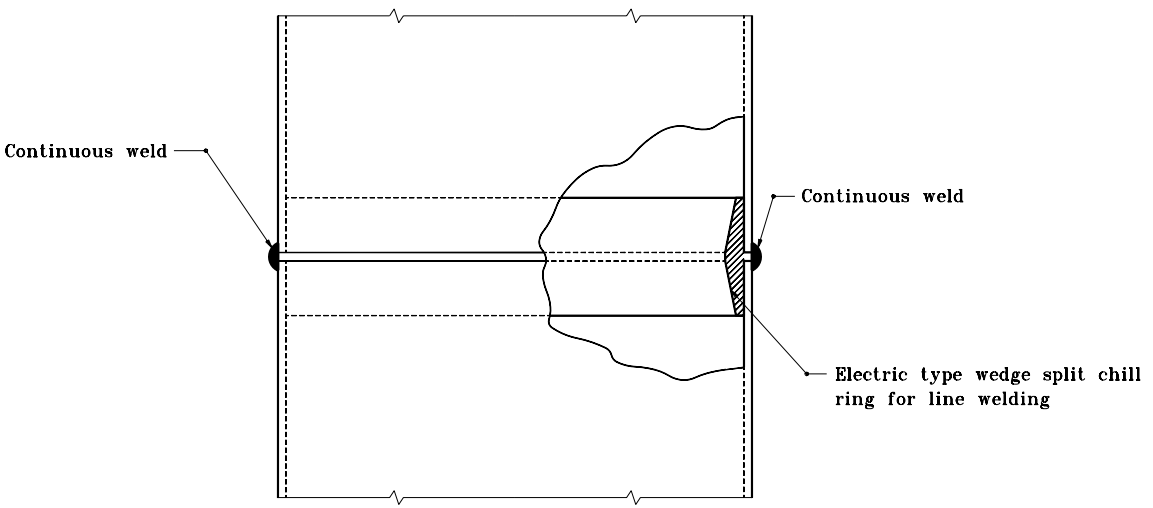

FOR ROUNDED PIPE

INDIANA DEPARTMENT OF TRANSPORTATION

SPLICING PILE SHELLS IN FIELD

SEPTEMBER 1994

STANDARD DRAWING NO. **E 701-BPIL-04**

ANTHONY L. UREMOVICH REGISTERED No. 18095 STATE OF INDIANA PROFESSIONAL ENGINEER

DESIGN STANDARDS ENGINEER

DETAILS PLACED IN THIS FORMAT	11-15-99
/s/ Anthony L. Uremovich DESIGN STANDARDS ENGINEER	11-15-99 DATE
/s/ Firooz Zandi CHIEF HIGHWAY ENGINEER	11-15-99 DATE
ORIGINALLY APPROVED	9-30-94