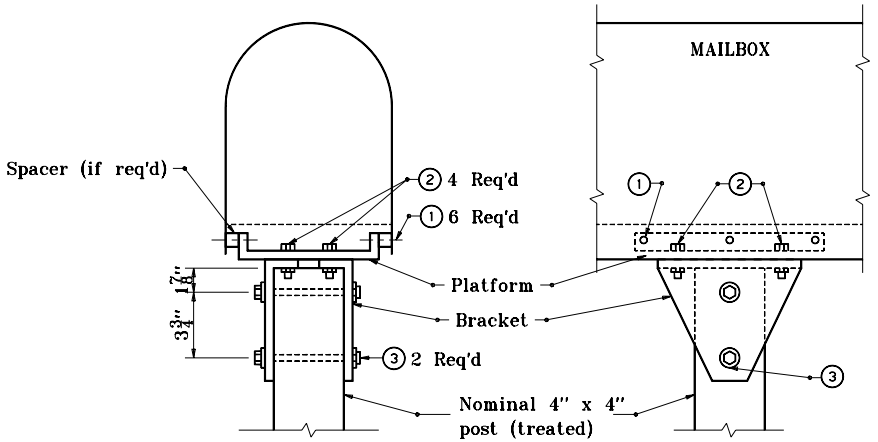

WITH WOOD POST

Details above platform same as shown above with wood post.

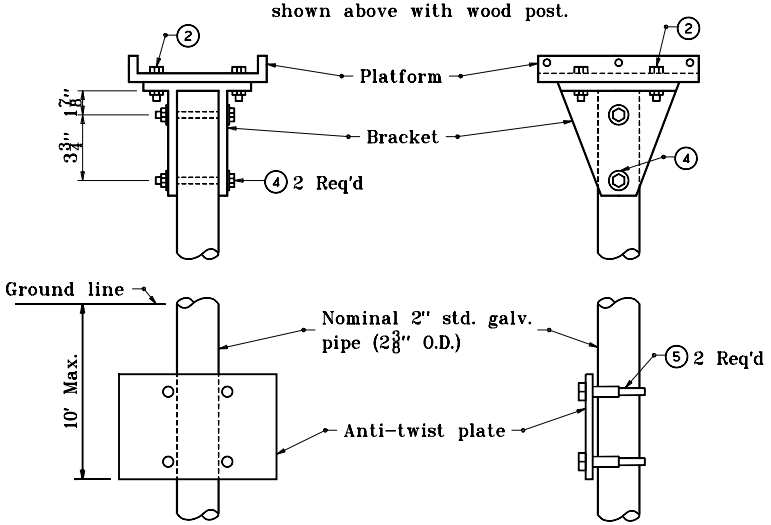

WITH PIPE POST

LEGEND

① #8-32 x "L" truss head machine screw with two $\frac{1}{4}$" flat washers, $\frac{1}{4}$" lock washers, and $\frac{1}{4}$" hex nut.

② $\frac{3}{8}$"-16 x $\frac{3}{4}$" hex cap screw with two $\frac{3}{8}$" flat washers, $\frac{3}{8}$" lock washer and $\frac{3}{8}$" hex nut.

③ $\frac{3}{8}$"-16 x $4\frac{1}{2}$" hex cap screw with two $\frac{3}{8}$" flat washers, $\frac{3}{8}$" lock washer, and $\frac{3}{8}$" hex nut.

④ $\frac{3}{8}$"-16 x 3" hex cap screw with two $\frac{3}{8}$" flat washers, $\frac{3}{8}$" lock washer, and $\frac{3}{8}$" hex nut.

⑤ Nominal $2\frac{3}{8}$" muffler clamp

INDIANA DEPARTMENT OF TRANSPORTATION

SINGLE MAILBOX ASSEMBLY

APRIL 1995

STANDARD DRAWING NO. **E 611-MBAS-01**

ANTHONY L. UREMOVICH REGISTERED No. 18095 STATE OF INDIANA PROFESSIONAL ENGINEER

DESIGN STANDARDS ENGINEER

DETAILS PLACED IN THIS FORMAT 11-15-99

/s/ Anthony L. Uremovich 11-15-99
DESIGN STANDARDS ENGINEER DATE

/s/ Firooz Zandi 11-15-99
CHIEF HIGHWAY ENGINEER DATE

ORIGINALLY APPROVED 4-03-95