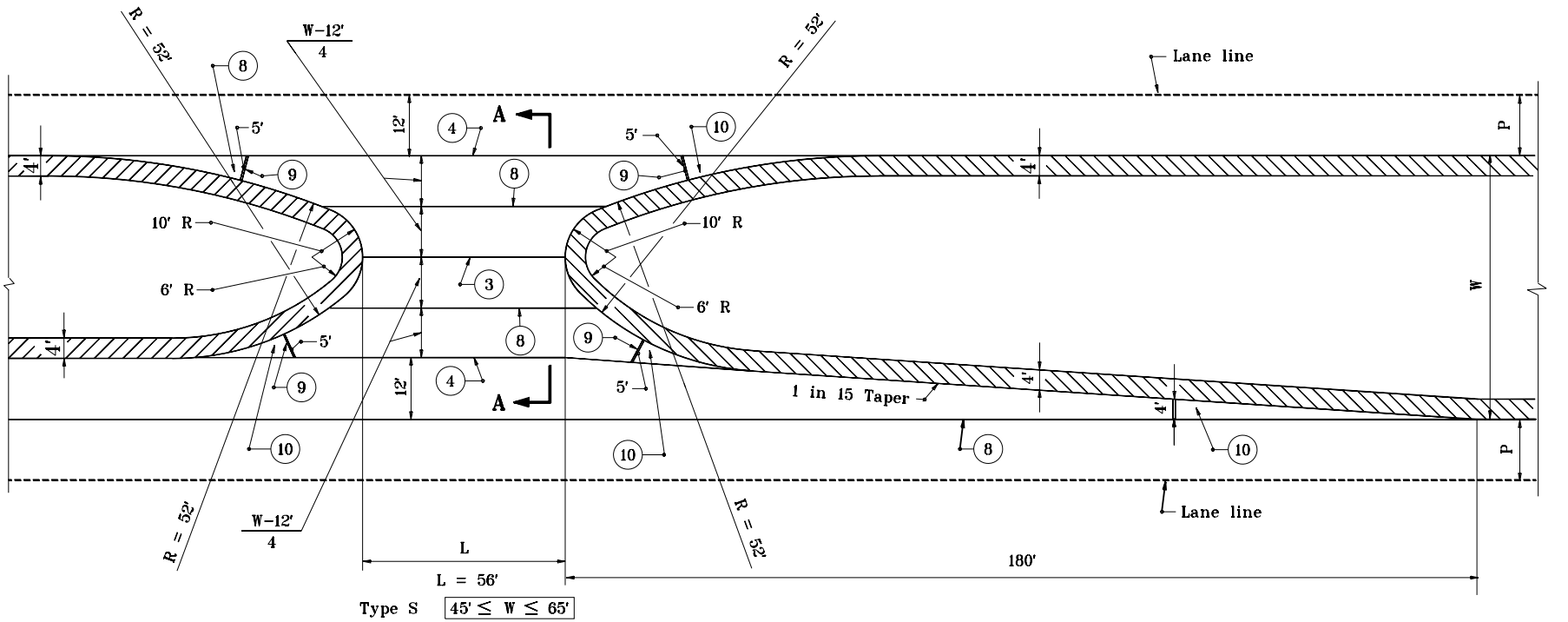

PLAN

NOTES :

1. See Standard Drawing E 610-PRCO-01 for Legend and Section A-A.

INDIANA DEPARTMENT OF TRANSPORTATION

PUBLIC ROAD CROSSOVER
TYPE S

MAY 2000

STANDARD DRAWING NO. **E 610-PRCO-05**

ANTHONY L. UREMOVICH REGISTERED No. 18095 STATE OF INDIANA PROFESSIONAL ENGINEER

DESIGN STANDARDS ENGINEER

/s/ Anthony L. Uremovich 5-01-00
DESIGN STANDARDS ENGINEER DATE

/s/ Firooz Zandi 5-01-00
CHIEF HIGHWAY ENGINEER DATE