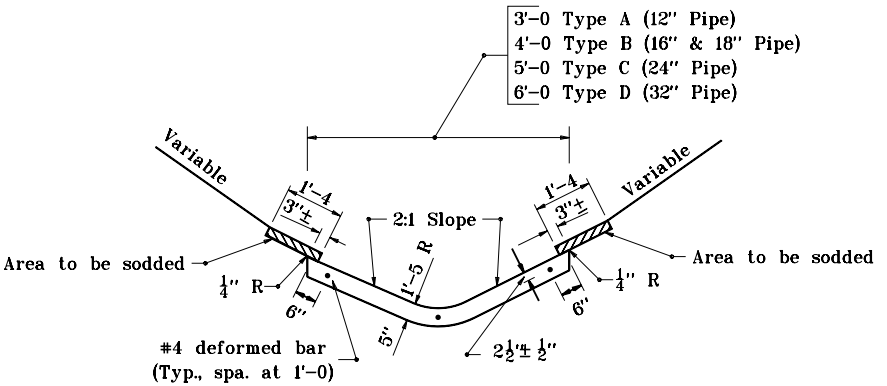

ELEVATION VIEW

PAVED SIDE DITCH TYPES A THROUGH D

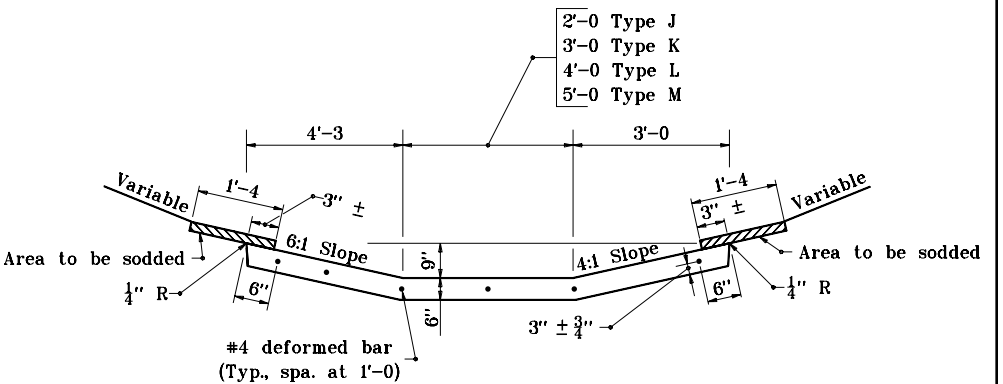

ELEVATION VIEW

PAVED SIDE DITCH TYPES J THROUGH M

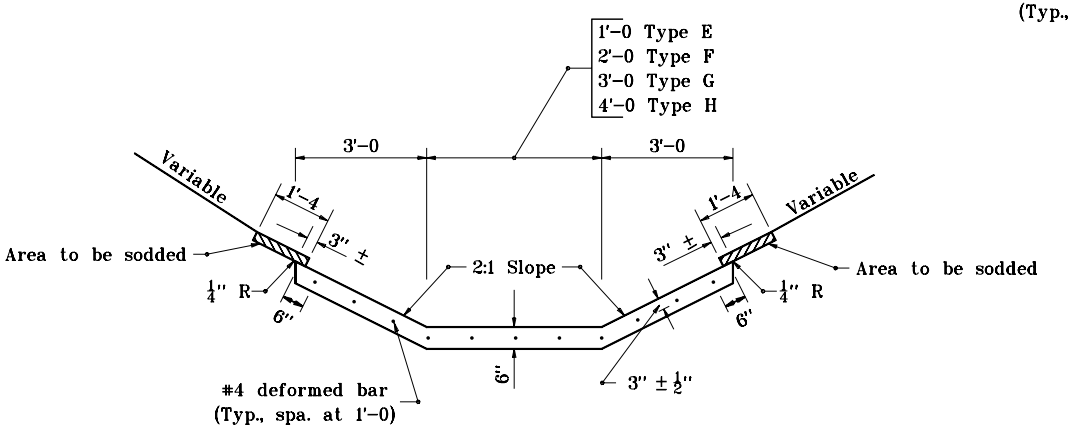

ELEVATION VIEW

PAVED SIDE DITCH TYPES E THROUGH H

INDIANA DEPARTMENT OF TRANSPORTATION

PAVED SIDE DITCH ELEVATIONS

SEPTEMBER 2000

STANDARD DRAWING NO. **E 607-PSDT-01**

ANTHONY L. UREMOVICH REGISTERED No. 18095 STATE OF INDIANA PROFESSIONAL ENGINEER

DESIGN STANDARDS ENGINEER

/s/ Anthony L. Uremovich 9-01-00
DESIGN STANDARDS ENGINEER DATE

/s/ Firooz Zandi 9-01-00
CHIEF HIGHWAY ENGINEER DATE