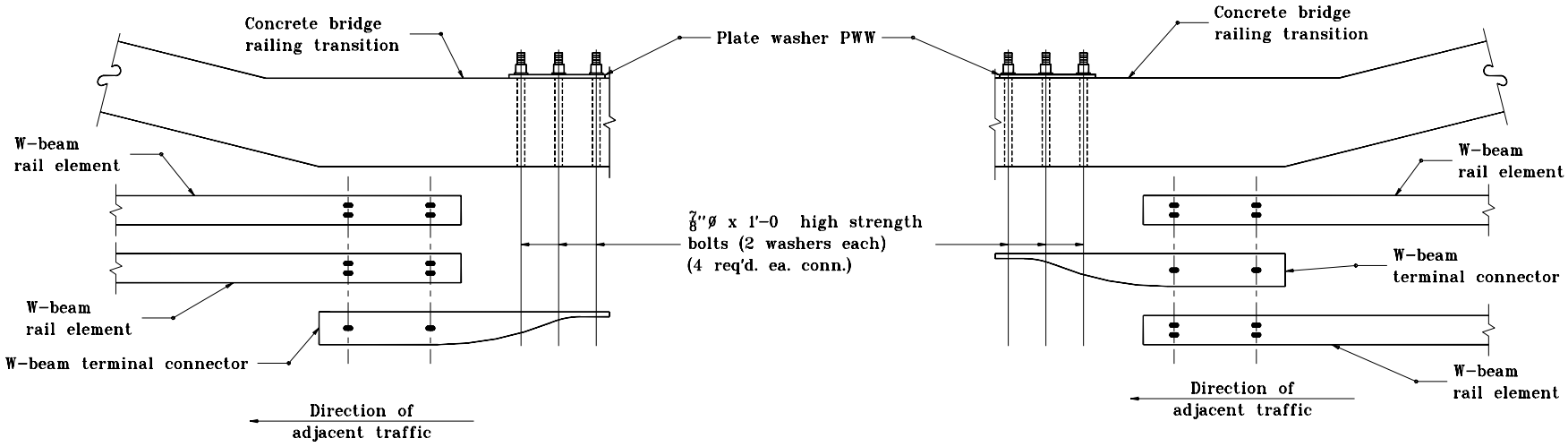


## LAP DETAIL AT BRIDGE RAILING TRANSITION

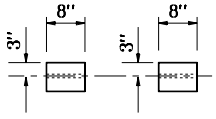


## PLAN

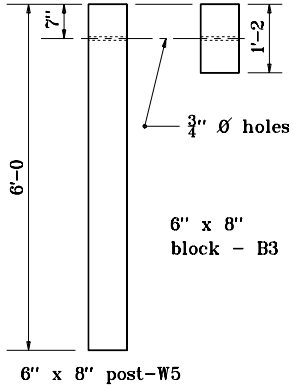


## ELEVATION

## POST & BLOCK DETAILS

## GENERAL NOTES

1. This lap shall be used where guardrail transition type WGB is specified to connect W-beam guardrail to concrete bridge railing.

INDIANA DEPARTMENT OF TRANSPORTATION

**GUARDRAIL TRANSITION TYPE WGB**

JANUARY 2000

STANDARD DRAWING NO. **E 601-TWGB-01**

ANTHONY L. UREMOVICH REGISTERED No. 18095 STATE OF INDIANA PROFESSIONAL ENGINEER

DESIGN STANDARDS ENGINEER

/s/ Anthony L. Uremovich 1-03-00
DESIGN STANDARDS ENGINEER DATE

/s/ Firooz Zandi 1-03-00
CHIEF HIGHWAY ENGINEER DATE