NOTES

1. This transition shall be used where new W-beam guardrail is being attached to existing rub-railed W-beam guardrail This transition shall also be used where a new lower height guardrail end treatment is being attached to existing rub-railed type guardrail.

2. These details are for the height adjustment of existing rub-railed type guardrail.

3. If rub-rail is not spliced at post, the channel shall be cut and repositioned behind the flange.

4. If rub-rail is spliced at post, the splice material shall be removed and the channel shall be repositioned behind the flange.

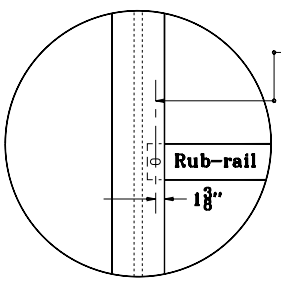

$\frac{3}{4}$" x 2" slot in channel
$\frac{3}{4}$" hole in flange.
Install $\frac{5}{8}$" hex bolt with hex nut and 2 cut washers.

RUB-RAIL RELOCATION DETAIL

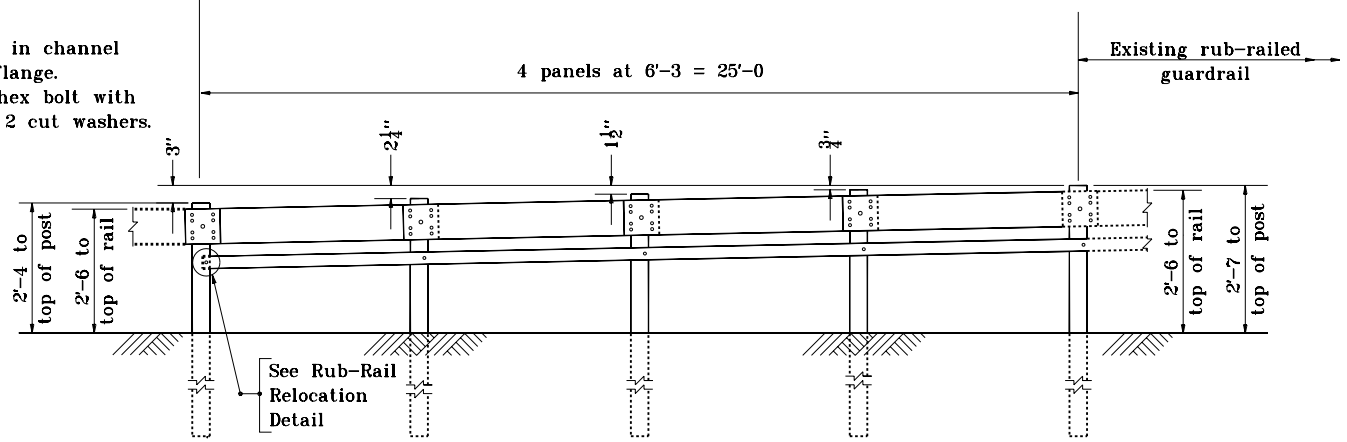

ELEVATION

GUARDRAIL TRANSITION TYPE VH AT 6'-3 POST SPACING

INDIANA DEPARTMENT OF TRANSPORTATION

GUARDRAIL TRANSITION TYPE VH

APRIL 1995

STANDARD DRAWING NO. **E 601-TTVH-01**

ANTHONY L. UREMOVICH REGISTERED No. 18095 STATE OF INDIANA PROFESSIONAL ENGINEER

DESIGN STANDARDS ENGINEER

DETAILS PLACED IN THIS FORMAT	11-15-99
/s/ Anthony L. Uremovich DESIGN STANDARDS ENGINEER	11-15-99 DATE
/s/ Firooz Zandi CHIEF HIGHWAY ENGINEER	11-15-99 DATE
ORIGINALLY APPROVED	4-03-95