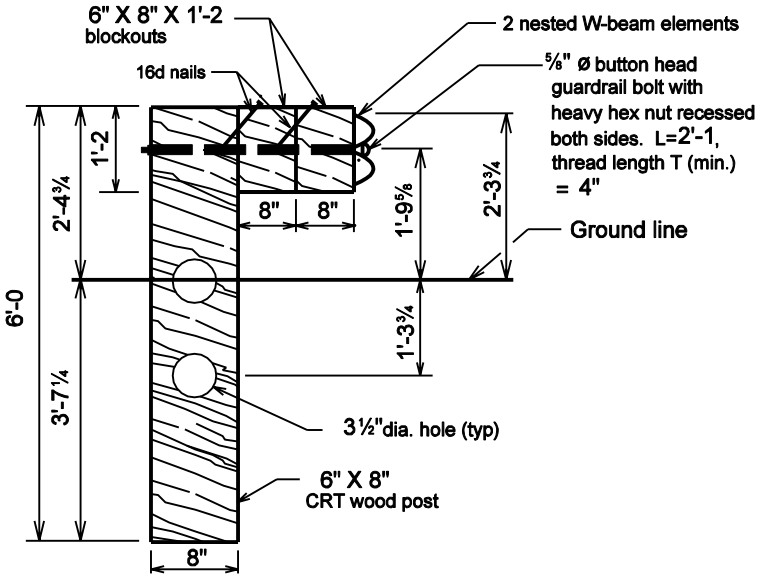

NESTED GUARDRAIL ASSEMBLY.

(Posts 5 to 10)

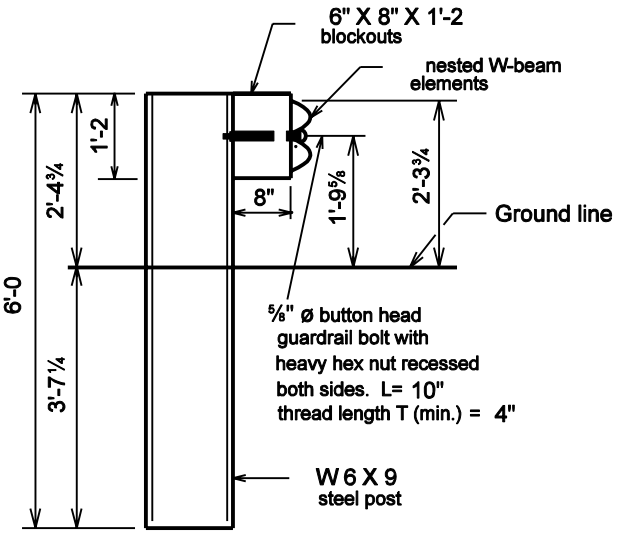

STEEL POST AND BLOCK FOR USE WITH NESTED GUARDRAIL ASSEMBLY

(Posts 1 to 4 and 11 to 14)

INDIANA DEPARTMENT OF TRANSPORTATION

NESTED GUARDRAIL ASSY.
FOR STRUCTURE WIDTH ≤ 24'-3

SEPTEMBER 2001

STANDARD DRAWING NO. E 601-NWGA-02

RICHARD L. VANCLEAVE REGISTERED No. 9750 STATE OF INDIANA PROFESSIONAL ENGINEER

DESIGN STANDARDS ENGINEER

/s/ Richard L. VanCleave 9-04-01
DESIGN STANDARDS ENGINEER DATE

/s/ Firooz Zandi 9-04-01
CHIEF HIGHWAY ENGINEER DATE