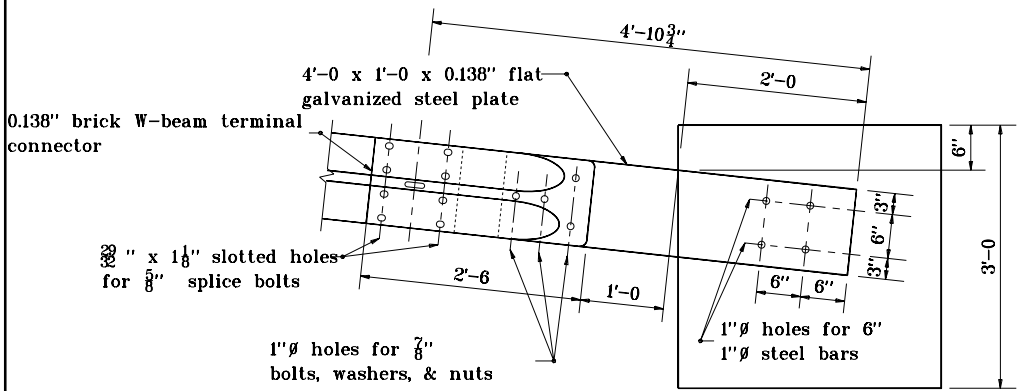

CONCRETE ANCHOR DETAIL

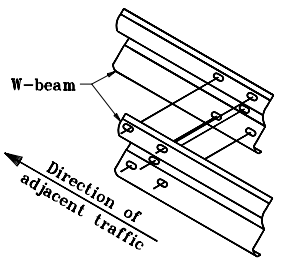

LAP DETAIL

GENERAL NOTES

1. The top of rail height at this post shall match the height of the adjacent guardrail.
2. Installation of guardrail end treatment type I at the end of a run of rub-rail type guardrail shall require the relocation of the rub-rail as shown.
3. See Standard Drawing E 601-GRET-04 for Post No. 2 Connection Detail.
4. If rub-rail is not spliced at post, the channel shall be cut and repositioned behind the flange.
5. If rub-rail is spliced at post, the splice material shall be removed and the channel shall be repositioned behind the flange.
6. See Standard Drawing E 808-MKN8-03 for object marker type 3 details.
7. See Standard Drawing E 601-GRET-04 for Splice Plate Assembly Detail.

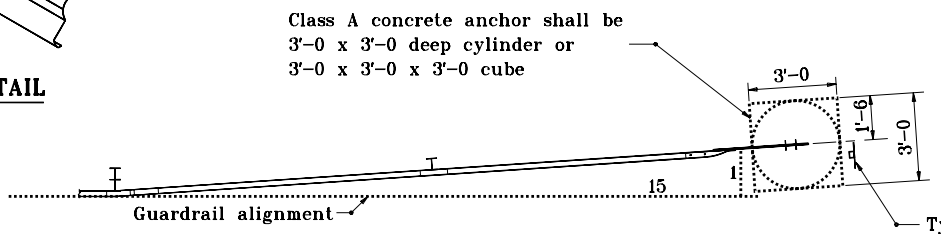

PLAN

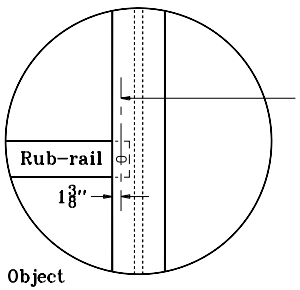

3/4" x 2" slot in channel
3/4" hole in flange.
Install 5/8" hex bolt with hex nut and 2 cut washers.

RUB-RAIL RELOCATION DETAIL

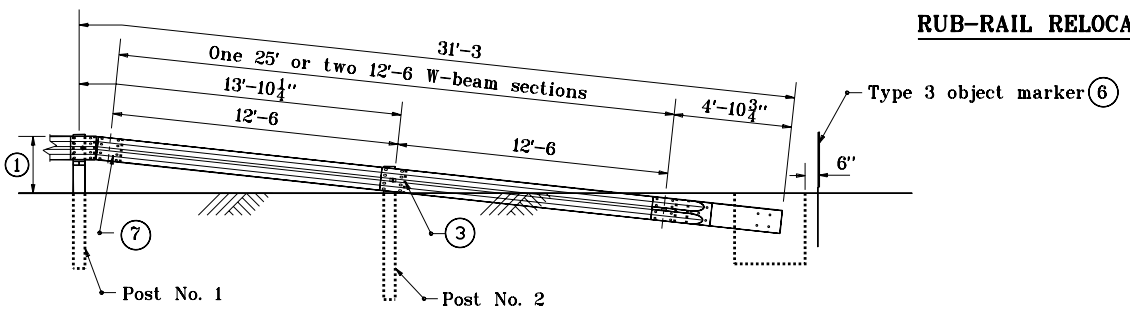

Post No. 1 & No. 2 length = 6'-0

ELEVATION

INDIANA DEPARTMENT OF TRANSPORTATION

GUARDRAIL
END TREATMENT TYPE I

NOVEMBER 1995

STANDARD DRAWING NO. **E 601-GRET-05**

ANTHONY L. UREMOVICH REGISTERED No. 18095 STATE OF INDIANA PROFESSIONAL ENGINEER

DESIGN STANDARDS ENGINEER

DETAILS PLACED IN THIS FORMAT	11-15-99
/s/ Anthony L. Uremovich DESIGN STANDARDS ENGINEER	11-15-99 DATE
/s/ Firooz Zandi CHIEF HIGHWAY ENGINEER	11-15-99 DATE
ORIGINALLY APPROVED	11-01-95